| DRAWING DESCRIPTION | DRAWING NUMBER | SHEET NO. | ISSUE NO. | ISSUE DATE | DRAWING STATUS | | | | |
|---|---|---|---|---|---|---|---|---|---|
| | | | | | CANCELLED | PRELIMINARY | FOR CONSTRUCTION | AS BUILT | REFERENCE ONLY |
| SITE SPECIFIC NOTES - SHEET 1 OF 3 | N27928 | S0-1 | 17 | 15/06/26 | | | ✓ | | |
| SITE SPECIFIC NOTES - SHEET 2 OF 3 | N27928 | S0-2 | 7 | 15/06/26 | | | ✓ | | |
| SITE SPECIFIC NOTES - SHEET 3 OF 3 | N27928 | S0-3 | 5 | 15/06/26 | | | ✓ | | |
| SITE LAYOUT AND ACCESS | N27928 | S1 | 17 | 15/06/26 | | | ✓ | | |
| ANTENNA LAYOUT | N27928 | S1-1 | 19 | 15/06/26 | | | ✓ | | |
| SOUTH ELEVATION | N27928 | S3 | 20 | 15/06/26 | | | ✓ | | |
| ANTENNA CONFIGURATION TABLE - SHEET 1 | N27928 | S3-2 | 10 | 15/06/26 | | | ✓ | | |
| ANTENNA CONFIGURATION TABLE - SHEET 2 | N27928 | S3-3 | 2 | 19/03/19 | | | | | ✓ |
| | | | | | | | | | |
| SITE TENURE PLAN | N27928 | G1 | 2 | 05/11/20 | | | | | ✓ |
| SITE EARTHING | N27928 | G4-1 | 1 | 25/09/06 | | | | | ✓ |
| SITE EARTHING | N27928 | G4-2 | 1 | 25/09/06 | | | | | ✓ |
| | | | | | | | | | |
| EQUIPMENT LAYOUT | N27928 | E1-1 | 14 | 15/06/26 | | | ✓ | | |
| DC POWER LINE DIAGRAM | N27928 | E4 | 4 | 15/06/26 | | | ✓ | | |
| 45RU PATHFINDER RACK LAYOUT | N27928 | E5 | 7 | 15/06/26 | | | ✓ | | |
| | | | | | | | | | |
| ANTENNA MOUNTING CLAMP DETAILS | N27928 | T3-1 | 5 | 19/03/08 | | | | | ✓ |
| PARABOLIC ANTENNA MOUNT DETAIL @ 19.0m | N27928 | T3-2 | 2 | 19/03/08 | | | | | ✓ |
| PARABOLIC ANTENNA MOUNT DETAIL @ 24.0m | N27928 | T3-3 | 2 | 19/03/08 | | | | | ✓ |
| HEADFRAME DETAILS - SHEET 1 OF 2 | N27928 | T3-4 | 3 | 09/06/09 | | | | | ✓ |
| HEADFRAME DETAILS - SHEET 2 OF 2 | N27928 | T3-5 | 3 | 09/06/09 | | | | | ✓ |
| ANTENNA MOUNTING DETAILS - SHEET 1 OF 2 | N27928 | T3-6 | 1 | 15/06/26 | | | ✓ | | |
| ANTENNA MOUNTING DETAILS - SHEET 2 OF 2 | N27928 | T3-7 | 1 | 15/06/26 | | | ✓ | | |
| CABLE LADDER DETAILS | N27928 | T5-1 | 2 | 19/03/08 | | | | | ✓ |
| CABLE LADDER SUPPORT | N27928 | T5-2 | 2 | 19/03/08 | | | | | ✓ |
| CABLE LADDER BRACKET FOR MONOPOLES | N27928 | T6 | 2 | 19/03/08 | | | | | ✓ |
| CABLE LADDER SUPPORT DETAILS | N27928 | T6-1 | 3 | 09/06/09 | | | | | ✓ |
| RRU MOUNTING DETAILS | N27928 | T8 | 2 | 28/08/12 | | | | | ✓ |
| | | | | | | | | | |
| STRUCTURAL CERTIFICATION - DESIGN ONLY | N27928 | Z1 | 1 | 01/12/12 | | | | | ✓ |
| STRUCTURAL AS BUILT CERTIFICATION | N27928 | Z1-3 | 1 | 11/12/12 | | | | | ✓ |
| STRUCTURAL DESIGN CERTIFICATION PROJECT NO. NA14133 | N27928 | Z1-4 | 1 | 25/06/13 | | | | | ✓ |
| STRUCTURAL AS BUILT CERTIFICATION PROJECT NO. NA14133.01 | N27928 | Z1-5 | 3 | 18/03/14 | | | | | ✓ |
| AS BUILT STRUCTURAL & EME COMPLIANCE CERTIFICATION F04 PROJECT NO. NA14133.01 | N27928 | Z1-6 | 1 | 25/03/14 | | | | | ✓ |
| STRUCTURAL DESIGN CERTIFICATION F01 PROJECT NO.NA15979.01 | N27928 | Z1-7 | 1 | 02/12/15 | | | | | ✓ |
| STRUCTURAL AS BUILT CERTIFICATION (F02) PROJECT NO.NA15979.01 | N27928 | Z1-8 | 1 | 17/03/16 | | | | | ✓ |
| AS BUILT STRUCTURAL & EME COMPLIANCE CERTIFICATION (F04) PROJECT NO. NA15979.01 | N27928 | Z1-9 | 1 | 22/05/16 | | | | | ✓ |

DO NOT SCALE

# BLACKBUTT RESERVOIR

NODE MANAGER ADDRESS ID: 232974

ADDRESS: 75 PIONEER DR
BLACKBUTT
NSW 2529

CYIENT
Level-14, 3 Parramatta Square, 153 Macquarie St, Parramatta, NSW 2150, Australia
T +61 2 8896 6160 | www.cyient.com

UNAPPROVED DRAWING

| ORDER | DRWN | CHKD | AMENDMENT | EXAM | APPD | DATE | ISS |
|---|---|---|---|---|---|---|---|
| NA15979.01 | AK | LY | AS BUILT - 30053394W0008VPL - LTE700 | AK | MK | 02.12.15 | 11 |
| NA19287.01 | DJ | MS | FOR CONSTRUCTION - 30077714WO061KOR - LTE2100 / LTE2600 | JG | DB | 04.03.19 | 12 |
| NA19287.01 | AB | AD | AS BUILT - 30077714WO092KOR - LTE2100 / LTE2600 | CF | CF | 19.03.19 | 13 |
| NA22652.01 | SP | GM | FOR CONSTRUCTION - 30088461W0125CYI - NR850/NR3600 | MB | MB | 07.01.21 | 14 |
| NA22652.01 | CU | SK | AS BUILT- 30088461W0178CYI - NR850/NR3600 | KSK | DG | 13.08.21 | 15 |
| NA29861.01 | MD | RT | FOR CONSTRUCTION - 80005689WO730CYI - LTE850/NR2600 | MB | MB | 15.06.26 | 16 |

© Telstra Limited ACN 086 174 781 All rights reserved.

MOBILE NETWORK SITE 232974
BLACKBUTT RESERVOIR
DRAWING INDEX AND DOCUMENT CONTROL - SHEET 1 OF 2
75 PIONEER DR, BLACKBUTT, NSW 2529

DWG NO. N27928 SHT NO. DC

A3

| DRAWING DESCRIPTION | DRAWING NUMBER | SHEET NO. | ISSUE NO. | ISSUE DATE | DRAWING STATUS | | | | |
|---|---|---|---|---|---|---|---|---|---|
| | | | | | CANCELLED | PRELIMINARY | FOR CONSTRUCTION | AS BUILT | REFERENCE ONLY |
| STRUCTURAL DESIGN CERTIFICATION 016159F01 PROJECT NO. NA19287.01 | N27928 | Z1-10 | 2 | 07/06/19 | | | | | ✓ |
| AS BUILT STRUCTURAL CERTIFICATION - 016159F02 PROJECT NO. NA19287.01 | N27928 | Z1-11 | 1 | 10/05/19 | | | | | ✓ |
| AS BUILT STRUCTURAL & EME COMPLIANCE CERTIFICATION 016159F04 PROJECT NO. NA19287.01 | N27928 | Z1-12 | 1 | 01/05/20 | | | | | ✓ |
| STRUCTURAL DESIGN CERTIFICATION 016159F01 PROJECT NO. NA22652.01 | N27928 | Z1-13 | 1 | 08/09/25 | | | | | ✓ |
| AS BUILT CONSTRUCTION CERTIFICATION (F02) PROJECT NO. NA22652.01 | N27928 | Z1-14 | 1 | 08/09/25 | | | | | ✓ |
| AS BUILT STRUCTURAL AND EME COMPLIANCE CERTIFICATION (F04) PROJECT NO. NA22652.01 | N27928 | Z1-15 | 1 | 08/09/25 | | | | | ✓ |
| STRUCTURAL DESIGN CERTIFICATION (F01) PROJECT NO. NA29861.01 | N27928 | Z1-16 | 1 | 15/06/26 | | | ✓ | | |
| REFERENCE DRAWING: | | | | | | | | | |
| STANDARD CONSTRUCTION NOTES | 017866P05 | 1 | 3 | 10/01/23 | | | | | ✓ |
| HUT AC POWER LINE SCHEMATIC | 017866P122 | 1 | 3 | 17/01/23 | | | | | ✓ |
| EQUIPMENT ALARM CONFIGURATION | 017866P123 | 1 | 3 | 17/01/23 | | | | | ✓ |
| DC POWER LINE DIAGRAM - FLATPACK 2 | 017866P124 | 1 | 7 | 17/01/23 | | | | | ✓ |
| DC POWER LINE DIAGRAM - SP18 | 017866P124 | 3 | 4 | 17/01/23 | | | | | ✓ |
| DC POWER LINE DIAGRAM ICS MK3.2 SHELTER SP22-HC POWER SYSTEM | 017866P124 | 5 | 3 | 17/01/23 | | | | | ✓ |
| MOBILE NETWORK SITE STANDARD DRAWING RBS6601 DONOR RACK LAYOUT | 017866P131 | 9 | 3 | 23/01/23 | | | | | ✓ |
| MOBILE NETWORK SITE STANDARD DRAWING 45 RU PATHFINDER RACK LAYOUT LTE700 - OPTION 1 | 017866P131 | 11 | 4 | 23/01/23 | | | | | ✓ |
| RRU POWER AND EARTHING DIAGRAM | 017866P134 | 1 | 7 | 25/01/23 | | | | | ✓ |
| RRU POWER AND EARTHING SP22-HC POWER SYSTEM & DC-DC CONVERTERS - 3 PHASE SITES | 017866P134 | 11 | 4 | 25/01/23 | | | | | ✓ |
| ELECTRICAL SPECIFICATION | 017866P160 | 1 | 5 | 03/02/23 | | | | | ✓ |
| EARTHING STD - GALV. STEEL BASED SYS | 017866P201 | 1 | 3 | 29/03/23 | | | | | ✓ |
| FEEDER EARTHING DETAILS | 017866P201 | 11 | 3 | 29/03/23 | | | | | ✓ |
| EARTHING STD - RRU FEEDER DETAIL | 017866P201 | 12 | 5 | 29/03/23 | | | | | ✓ |
| EARTHING STD - INTERNAL EARTHING SET | 017866P201 | 13 | 5 | 29/03/23 | | | | | ✓ |
| FEEDER EARTH BAR DETAILS | 017866P201 | 18 | 2 | 29/03/23 | | | | | ✓ |
| STANDARD ROCLA COMMUNICATIONS POLE | SR2 | 1 | B | 21/02/14 | | | | | ✓ |
| RRU/CWDM MOUNTS FOR 6xRRUS ON POLES GENERAL ARRANGEMENT & DETAILS | CF-12565 | 1 | 1 | 14/11/12 | | | | | ✓ |
| POST CONSTRUCTION BUILD VALIDATION REPORT | N27928 | P2 | 1 | 12/09/13 | | | | | ✓ |

Telstra

# BLACKBUTT RESERVOIR

NODE MANAGER ADDRESS ID: 232974

ADDRESS: 75 PIONEER DR
BLACKBUTT
NSW 2529

CYIENT

Level-14, 3 Parramatta Square, 153 Macquarie St, Parramatta, NSW 2150, Australia

T +61 2 8896 6160 | www.cyient.com

UNAPPROVED DRAWING

| ORDER | DRWN | CHKD | AMENDMENT | EXAM | APPD | DATE | ISS |
|---|---|---|---|---|---|---|---|
| NA15979.01 | AK | LY | AS BUILT - 30053394W0008VPL - LTE700 | AK | MK | 02.12.15 | 4 |
| NA19287.01 | DJ | MS | FOR CONSTRUCTION - 30077714WO061KOR - LTE2100 / LTE2600 | JG | DB | 04.03.19 | 5 |
| NA19287.01 | AB | AD | AS BUILT - 30077714WO092KOR - LTE2100 / LTE2600 | CF | CF | 19.03.19 | 6 |
| NA22652.01 | SP | GM | FOR CONSTRUCTION - 30088461W0125CYI - NR850/NR3600 | MB | MB | 07.01.21 | 7 |
| NA22652.01 | CU | SK | AS BUILT- 30088461W0178CYI - NR850/NR3600 | KSK | DG | 13.08.21 | 8 |
| NA29861.01 | JH | RT | FOR CONSTRUCTION - 80005689WO730CYI - LTE850/NR2600 | MB | MB | 15.06.26 | 9 |

© Telstra Limited ACN 086 174 781 All rights reserved.

Telstra

MOBILE NETWORK SITE 232974
BLACKBUTT RESERVOIR

DRAWING INDEX AND DOCUMENT CONTROL - SHEET 2 OF 2
75 PIONEER DR, BLACKBUTT, NSW 2529

DWG NO. N27928 SHT NO. DC-2

DO NOT SCALE

A3

# SITE SPECIFIC NOTES

## EQUIPMENT SHELTER

TYPE: EXISTING TELSTRA MK 1.0
EQUIPMENT SHELTER
COLOUR: PAPER BARK
FEEDER ENTRY WINDOW: LEFT SIDE &
RIGHT SIDE
AIR CONDITIONING CAGE: YES
REFERENCE DRAWING: SHEET E1-1

## STRUCTURE

TYPE: EXISTING INDARA ROCLA
CONCRETE MONOPOLE WITH STEEL
JACKET STRENGTHENING
MODEL NO.: SR2-H35-J
HEIGHT: 35.0m
COLOUR: NATURAL CONCRETE
REFERENCE DRAWING: N/A

## ANTI-CLIMB DEVICE

TYPE: EXISTING INDARA LOCKED COMPOUND
FENCING TO THE SITE
FINISH.: GALVANISED FINISH
COLOUR: GALVANISED FINISH
REFERENCE DRAWING: N/A

## HEADFRAME

TYPE: EXISTING TELSTRA MERCEDES
HEADFRAME
MODEL NO.: TO SUIT POLE TYPE
COLOUR: GALVANISED FINISH
REFERENCE DRAWING: T3-4 & T3-5 SERIES

## ANTENNA ACCESS

TELSTRA: ELEVATED WORK PLATFORM
OTHERS: STEP PEGS AND 'LAD SAF'

## ANTENNA MOUNTS

TYPE: EXISTING & RELOCATED TELSTRA
STEEL MOUNTS WITH PROPOSED
STANDOFF'S
COLOUR: GALVANISED FINISH
REFERENCE DRAWING: QB200403 SHEET 1
& SHEETS T3-4 TO T3-7

17

## POWER SUPPLY

EXISTING TELSTRA POWER SUPPLY
(3 PHASE/63 AMP)
DIAL 1100 BEFORE YOU DIG.

## PROPERTY SIGNAGE

SPECIFY PROPERTY SIGNAGE AS PER
DOCUMENT 017866A12.
PROPERTY SIGN INCLUDES RFNSA
SITE NUMBER.
SITE NAME: BRANDED SITE IDENTIFICATION
REGULAR (BSr).
TELSTRA S/I NUMBER 187/00929.
JABAC PART NUMBER TFMS929-M.

## SITE ACCESS

VIA 75 PIONEER DR, BLACKBUTT, NSW 2529
REFER TO SHEET S1 FOR DETAILS

## SITE SIGNAGE

ALL EME SIGNAGE IS REFERENCED ON
DRAWINGS S1, S1-1 & S3.
REFER TO DOCUMENT 005486 FOR DETAILS.

## GENERAL NOTES

1. ALL DIMENSIONS ARE IN MILLIMETRES UNLESS SPECIFIED OTHERWISE.
2. BIRD PROOFING CABLES AND ALL ACCESS POINTS ON THE STRUCTURE MUST BE BIRD PROOFED IN ACCORDANCE WITH THE METHODS SPECIFIED IN DOCUMENT NO. 003615 EXTERNAL PLANT STANDARDS FOR MOBILE BASE STATIONS, SECTION 6.3.3.
3. SERVICES, WHERE SHOWN ARE INDICATIVELY ONLY. LOCATION OF ALL RELEVANT EXISTING SERVICES SHALL BE IDENTIFIED AND CONFIRMED PRIOR TO COMMENCING WORK. THE CONTRACTOR TO LIAISE WITH RELEVANT AUTHORITIES FOR DIRECTIONS AND PERMITS REQUIRED. DIAL BEFORE YOU DIG 1100.
4. FEEDER CONNECTION DETAILS, ELECTRICAL AND MECHANICAL TILTS ARE TO BE OBTAINED FROM CANRAD REPORTS.
5. CONSTRUCTORS ARE TO BE AWARE OF TELSTRA DOCUMENT 007338-C8-11 AND IN PARTICULAR CLAUSE 7.3 & 10.3 WHICH DESCRIBES REQUIREMENTS PERSONNEL MUST UNDERTAKE IN RESPECT TO ASBESTOS MANAGEMENT AT TELSTRA FACILITIES.

## SITE REFERENCE DETAILS

| OCCUPIER | SITE NAME | SITE CODE |
|---|---|---|
| TELSTRA | BLACKBUTT RESERVOIR | 232974 |
| OPTUS | SHELLHARBOUR | S0122 |
| VODAFONE | SHELLHARBOUR | 2235 |
| RFNSA SITE NUMBER - 2529003<br>STRUCTURE OWNER - INDARA (3000560) | | |

## SERVICES LEGEND

| | |
|---|---|
| —T——T——T— | OPTIC FIBRE ABOVE GROUND |
| —T----T----T---- | OPTIC FIBRE BELOW GROUND |
| —E——E— | ABOVE GROUND ELECTRICAL SUPPLY |
| — — —E— — —E— | BELOW GROUND ELECTRICAL SUPPLY |
| — — —G— — —G— | GAS SUPPLY |
| —HV——HV— | HIGH VOLTAGE ELECTRICAL SUPPLY |
| —W—W—W—W—W— | WATER SUPPLY |
| —S—S—S—S— | SEWER LINE |
| —— — —SW—— | STORM WATER |
| —FE——FE— | ABOVE GROUND FEEDER CABLES |
| — — —FE— — —FE— | BELOW GROUND FEEDER CABLES |

(X) AX —— DENOTES EXISTING TELSTRA ANTENNA SECTOR AS SHOWN ON SHEET S1-1

(X) AX ---- DENOTES PROPOSED TELSTRA ANTENNA SECTOR AS SHOWN ON SHEET S1-1

UNAPPROVED DRAWING

COMPLIANCE BOX
COMPLETED AS PER DESIGN ☐
ALTERATIONS IN RED ☐
NAME (PRINT)
SIGNATURE DATE

NOTE: THIS DRAWING TO BE READ IN CONJUNCTION WITH SHEETS S0-2 & S0-3

FOR CONSTRUCTION

DO NOT SCALE

CYIENT
Level-14, 3 Parramatta Square, 153 Macquarie St, Parramatta, NSW 2150, Australia
T +61 2 8896 6160 | www.cyient.com

| ORDER | DRWN | CHKD | AMENDMENT | EXAM | APPD | DATE | ISS |
|---|---|---|---|---|---|---|---|
| NA15979.01 | AK | LY | AS BUILT - 30053394W0008VPL - LTE700 | AK | MK | 02.12.15 | 12 |
| NA19287.01 | DJ | MS | FOR CONSTRUCTION - 30077714WO061KOR - LTE2100 / LTE2600 | JG | DB | 04.03.19 | 13 |
| NA19287.01 | AB | AD | AS BUILT - 30077714WO092KOR - LTE2100 / LTE2600 | CF | CF | 19.03.19 | 14 |
| NA22652.01 | SP | GM | FOR CONSTRUCTION - 30088461W0125CYI - NR850/NR3600 | MB | MB | 07.01.21 | 15 |
| NA22652.01 | CU | SK | AS BUILT- 30088461W0178CYI - NR850/NR3600 | KSK | DG | 13.08.21 | 16 |
| NA29861.01 | JH | RT | FOR CONSTRUCTION - 80005689WO730CYI - LTE850/NR2600 | MB | MB | 15.06.26 | 17 |

© Telstra Limited ACN 086 174 781 All rights reserved.

Telstra

MOBILE NETWORK SITE 232974
BLACKBUTT RESERVOIR
SITE SPECIFIC NOTES - SHEET 1 OF 3
75 PIONEER DR, BLACKBUTT, NSW 2529

DWG NO. N27928
SHT NO. S0-1

A3

## EQUIPMENT NOTES - PROJECT NO. NA29861.01

| ITEM | EQUIPMENT | EQUIPMENT DETAILS | EXISTING | PROPOSED | TOTAL | REFERENCE DWG |
|---|---|---|---|---|---|---|
| 1 | 45RU PATHFINDER RACK | 530 x 530 x 2200mm (W,D,H) | 2 | -1 | 1 | SHEETS E1-1 & E5 |
| 2 | POST RACK 45RU SUIT 4490 | DECON RGL-091 RACK | 0 | 1 | 1 | SHEETS E1-1 & E5 |
| 3 | DONOR RACK | - | 2 | 1 (SPARE) | 2 | SHEET E1-1 |
| 4 | VERTIV DC-DC CONVERTERS SUB RACK | 486 x 345 x 190mm (W,D,H) | 1 | 0 | 1 | SHEET E1-1 |
| 5 | VERTIV DC-DC CONVERTERS | G3 C48/48-1500E3 1.5kW | 4 | 0 | 4 | SHEET E1-1 |
| 6 | ELTEK SP22-HC (PSU) | 600 x 600 x 2200mm (W,D,H) | 1 | 0 | 1 | SHEETS E1-1 & E4 |
| 7 | ELTEK SP22-HC RECTIFIERS | FP2 HE, 2kW | 9 | 0 | 9 | SHEETS E1-1 & E4 |
| 8 | ELTEK SP22-HC DC-DC CONVERTERS | FP2, 1.35kW | 8 | 0 | 8 | SHEETS E1-1 & E4 |
| 9 | ELTEK SP22-HC BATTERY STRINGS | FXH190-12S | 3 | -3, 2 | 2 | SHEETS E1-1 & E4 |
| 10 | ERICSSON DCDU | TO BE RELOCATED IN PATHFINDER RACK GD/103/2 | 1 | 0 | 1 | SHEETS E1-1 & E5 |
| 11 | 10A CB | - | 0 | 1 | 1 | SHEETS E1-1 & E5 |
| 12 | KEREM A100 PDP | TO BE INSTALLED IN DECON RGL-091 RACK GD/103/4 | 0 | 1 | 1 | SHEETS E1-1 & E5 |
| 13 | ERICSSON RBS3206 | 600(W) x 470(D) x 1850(H) NATURAL COLOUR | 1 | 1 (SPARE) | 1 | SHEET E1-1 |
| 14 | ERICSSON RBS6202 | 500 x 525 x 568mm (W,D,H) SUPPORT TYPE 19" RACK | 1 | 1 (SPARE) | 1 | SHEETS E1-1 & E5 |
| 15 | ERICSSON BB5216 | INSTALLED IN RBS6202 AT GD/103/2 | 1 | -1 | 0 | SHEETS E1-1 & E5 |
| 16 | ERICSSON BB6630 | INSTALLED IN PATHFINDER RACK GD/103/2 | 2 | -2 | 0 | SHEETS E1-1 & E5 |
| 17 | ERICSSON RP6672 (LTE700/LTE850/NR850/LTE1800/LTE2100/NR/LTE2600/NR3600) | TO BE INSTALLED IN PATHFINDER RACK GD/103/2 | 0 | 1 | 1 | SHEETS E1-1 & E5 |
| 18 | ERICSSON RUS 02 (B28B) | INSTALLED IN RBS6202 AT GD/103/2 | 6 | 6 (SPARE) | 6 | SHEETS E1-1 & E5 |
| 19 | ERICSSON R503 | INSTALLED IN RBS6202 AT GD/103/2 | 2 | -2 | 0 | SHEETS E1-1 & E5 |
| 20 | ERICSSON R6675 ROUTER | INSTALLED IN PATHFINDER RACK GD/103/2 | 1 | 0 | 1 | SHEETS E1-1 & E5 |
| 21 | FIBRE PATCH PANEL | TO BE INSTALLED IN PATHFINDER RACK GD/103/2 | 1 | -1, 1 | 1 | SHEETS E1-1 & E5 |
| 22 | SLIDE OUT FIBRE MANAGEMENT TRAYS | TO BE INSTALLED IN PATHFINDER RACK GD/103/2 | 1 | 2 | 3 | SHEETS E1-1 & E5 |
| 23 | FIBRE MANAGEMENT TRAYS | INSTALLED IN PATHFINDER RACK GD/103/2 | 3 | -3 | 0 | SHEETS E1-1 & E5 |
| 24 | FIBRE MANAGEMENT TRAY | INSTALLED IN PATHFINDER RACK GD/101/4 | 1 | -1 | 0 | SHEET E1-1 |
| 25 | W&B HYBRID CABLE MANAGEMENT TRAYS | TO BE INSTALLED IN PATHFINDER RACK GD/103/2 | 0 | 3 | 3 | SHEETS E1-1 & E5 |
| 26 | 4490 ADAPTOR SHELFS | TO BE INSTALLED IN DECON RGL-091 RACK GD/103/4 | 0 | 3 | 3 | SHEETS E1-1 & E5 |
| 27 | ERICSSON SITE INTEGRATION UNIT (SIU) | 482 x 350 x 45mm (W,D,H) | 1 | 1 (SPARE) | 1 | SHEETS E1-1 & E5 |
| 28 | ERICSSON SITE CONTROLLER (ESC) | INSTALLED IN MISC RACK | 1 | 0 | 1 | SHEET E1-1 |
| 29 | EATON INTERNAL SURGE PROTECTION DEVICE (SPD 12.3 WAY) | 350 x 150 x 350mm (W,D,H) | 1 | -1 | 0 | SHEET E1-1 |
| 30 | VERTIV EXTERNAL SURGE PROTECTION DEVICE (12.3 WAY) | IN WEATHER PROOF ENCLOSURE/WALL MOUNTED | 0 | 1 | 1 | SHEET E1-1 |

UNAPPROVED DRAWING

COMPLIANCE BOX
COMPLETED AS PER DESIGN ☐
ALTERATIONS IN RED ☐
NAME (PRINT)
SIGNATURE DATE

SITE DESIGN BRIEF LTE850/NR2600 NA29861.01
ISSUE 01 DATED 12/03/26

NOTE: THIS DRAWING TO BE READ IN CONJUNCTION WITH SHEETS S0-1 & S0-3

FOR CONSTRUCTION

DO NOT SCALE

CYIENT
Level-14, 3 Parramatta Square, 153 Macquarie St, Parramatta, NSW 2150, Australia
T +61 2 8896 6160 | www.cyient.com

| ORDER | DRWN | CHKD | AMENDMENT | EXAM | APPD | DATE | ISS |
|---|---|---|---|---|---|---|---|
| NA15979.01 | AK | LY | AS BUILT - 30053394W0008VPL - LTE700 | AK | MK | 02.12.15 | 2 |
| NA19287.01 | DJ | MS | FOR CONSTRUCTION - 30077714WO061KOR - LTE2100 / LTE2600 | JG | DB | 04.03.19 | 3 |
| NA19287.01 | AB | AD | AS BUILT - 30077714WO092KOR - LTE2100 / LTE2600 | CF | CF | 19.03.19 | 4 |
| NA22652.01 | SP | GM | FOR CONSTRUCTION - 30088461W0125CYI - NR850/NR3600 | MB | MB | 07.01.21 | 5 |
| NA22652.01 | CU | SK | AS BUILT- 30088461W0178CYI - NR850/NR3600 | KSK | DG | 13.08.21 | 6 |
| NA29861.01 | JH | RT | FOR CONSTRUCTION - 80005689WO730CYI - LTE850/NR2600 | MB | MB | 15.06.26 | 7 |

© Telstra Limited ACN 086 174 781 All rights reserved.

Telstra

MOBILE NETWORK SITE 232974
BLACKBUTT RESERVOIR
SITE SPECIFIC NOTES - SHEET 2 OF 3
75 PIONEER DR, BLACKBUTT, NSW 2529

DWG NO. N27928 SHT NO. S0-2

A3

# EQUIPMENT NOTES - PROJECT NO. NA29861.01

| ITEM | EQUIPMENT | EQUIPMENT DETAILS | EXISTING | PROPOSED | TOTAL | REFERENCE DWG |
|---|---|---|---|---|---|---|
| 31 | 5G AUGMENTATION BOX | 200 x 150 x 400mm (W,D,H) | 1 | -1 | 0 | SHEET E1-1 |
| 32 | RFS RRU INTERFACE JUNCTION BOXES | - | 3 | -3 | 0 | SHEETS S1-1 & S3 |
| 33 | W&B RRU INTERFACE JUNCTION BOXES | TC4039MOBILE08 | 0 | 3 | 3 | SHEETS S1-1 & S3 |
| 34 | ERICSSON RADIO 4415 (B7) | 342 (W) x 149 (D) x 420mm (H) NATURAL COLOUR | 3 | -3 | 0 | SHEETS S1-1 & S3 |
| 35 | ERICSSON RADIO 2212 (B5) | 342 x 160 x 420mm (W,D,H) NATURAL COLOUR | 3 | -3 | 0 | SHEETS E1-1 & E5 |
| 36 | ERICSSON RADIO 4485 (B3/B1/B7) (LTE1800/LTE2100/NR/LTE2600) | 398 x 145 x 533mm (W,D,H) NATURAL COLOUR | 0 | 3 | 3 | SHEETS S1-1 & S3 |
| 37 | ERICSSON RADIO 4480 (B1/B3) | 400 x 145 x 550mm (W,D,H) NATURAL COLOUR | 3 | -3 | 0 | SHEETS S1-1 & S3 |
| 38 | ERICSSON RADIO 4490HP (B28/B26) (LTE700/LTE850/NR850) | 397 x 165 x 522mm (W,D,H) NATURAL COLOUR | 0 | 3 | 3 | SHEETS E1-1 & E5 |
| 39 | KAELUS TWIN BANDSTOP FILTER | BSF0020F1V12 | 3 | -3 | 0 | SHEETS E1-1 & E5 |
| 40 | TRIASX DUAL DUPLEX FILTER | DDF0022F1V1 | 6 | 6 (SPARE) | 6 | SHEET E1-1 |
| 41 | KAELUS QUAD FILTERS (LTE700/LTE850/NR850) | KA-6035 | 0 | 3 | 3 | SHEETS E1-1 & E5 |
| 42 | KAELUS TWIN COMBINER | DBC0086F1V1-1 INSTALLED IN 45RU PATHFINDER RACK | 3 | 3 (SPARE) | 3 | SHEETS E1-1 & E5 |
| 43 | KAELUS TMA (LTE700/LTE850/NR850) | KA-1031 TMA | 0 | 6 | 6 | SHEETS S1-1 & S3 |
| 44 | KAELUS TMA | TMA2158F01V2-1E TWIN TMA | 3 | -3 | 0 | SHEETS S1-1 & S3 |
| 45 | RFS LCF78-50JA | 40m LENGTH | 12 | 0 | 12 | SHEETS S1 & S3 |
| 46 | RFS HYBRIFLEX 7/8" 8P16F | 60m LENGTH | 3 | -3 | 0 | SHEETS S1 & S3 |
| 47 | W&B HYBRID CABLE 7/8" | 50m LENGTH | 0 | 3 | 3 | SHEETS S1 & S3 |
| 48 | GPS SPLITTER | INSTALLED IN PATHFINDER RACK GD/103/2 | 1 | 1 (SPARE) | 1 | SHEETS E1-1 & E5 |
| 49 | GPS RECEIVER | INSTALLED IN PATHFINDER RACK GD/103/2 | 1 | -1 | 0 | SHEETS E1-1 & E5 |
| 50 | GPS RECEIVER UNIT | ERICSSION GRU 05 01 RECEIVER NCD90189/1 | 0 | 1 | 1 | SHEETS E1-1 & E5 |
| 51 | GPS ANTENNA (LTE) | GPS KRE 101 2082 1 OMNI | 1 | -1 | 0 | SHEETS S1 & S3 |
| 52 | KAELUS, DUAL BAND GNSS GPS ACTIVE ANT | KA-7005-1110 | 0 | 1 | 1 | SHEETS S1 & S3 |
| 53 | RF JUMPER 1_5M N F TO SMA M | TSR951339/1500 | 0 | 1 | 1 | - |
| 54 | GPS WBT TOD CABLE | WBT R6000 TOD CABLE - 3M | 0 | 1 | 1 | - |
| 55 | GPS SYNC CABLE | RPM1136127/2000 | 0 | 1 | 1 | - |
| 56 | AIRWEL AIR CONDITIONER | WALL MOUNTED RAC TYPE | 1 | 1 (SPARE) | 1 | - |
| 57 | LENMIC AIR CONDITIONER | L600P2 WALL MOUNTED RAC TYPE | 1 | 0 | 1 | - |
| 58 | L350A FAN UNIT | - | 1 | 0 | 1 | - |
| 59 | COOLING FAN FILTER | - | 1 | -1 | 0 | - |
| 60 | COOLING FAN FILTER | VAK0005 | 0 | 1 | 1 | - |
| 61 | PLC | MITSUBISHI AL2-14MR-D | 1 | 0 | 1 | SHEET E1 |

UNAPPROVED DRAWING

COMPLIANCE BOX
COMPLETED AS PER DESIGN ☐
ALTERATIONS IN RED ☐
NAME (PRINT)
SIGNATURE DATE

NOTE: THIS DRAWING TO BE READ IN CONJUNCTION WITH SHEETS S0-1 & S0-2

FOR CONSTRUCTION

DO NOT SCALE
DIMS IN

CYIENT
Level-14, 3 Parramatta Square, 153 Macquarie St,
Parramatta, NSW 2150, Australia
T +61 2 8896 6160 | www.cyient.com

| ORDER | DRWN | CHKD | AMENDMENT | EXAM | APPD | DATE | ISS |
|---|---|---|---|---|---|---|---|
| NA19287.01 | DJ | MS | FOR CONSTRUCTION - 30077714WO061KOR - LTE2100 / LTE2600 | JG | DB | 04.03.19 | 1 |
| NA19287.01 | MS | AD | AS BUILT - 30077714WO092KOR - LTE2100 / LTE2600 | CF | CF | 19.03.19 | 2 |
| NA22652.01 | SP | GM | FOR CONSTRUCTION - 30088461W0125CYI - NR850/NR3600 | MB | MB | 07.01.21 | 3 |
| NA22652.01 | CU | SK | AS BUILT- 30088461W0178CYI - NR850/NR3600 | KSK | DG | 13.08.21 | 4 |
| NA29861.01 | JH | RT | FOR CONSTRUCTION - 80005689WO730CYI - LTE850/NR2600 | MB | MB | 15.06.26 | 5 |

© Telstra Limited ACN 086 174 781 All rights reserved.

Telstra

MOBILE NETWORK SITE 232974
BLACKBUTT RESERVOIR
SITE SPECIFIC NOTES - SHEET 3 OF 3
75 PIONEER DR, BLACKBUTT, NSW 2529

DWG NO. N27928
SHT NO. S0-3

A3V

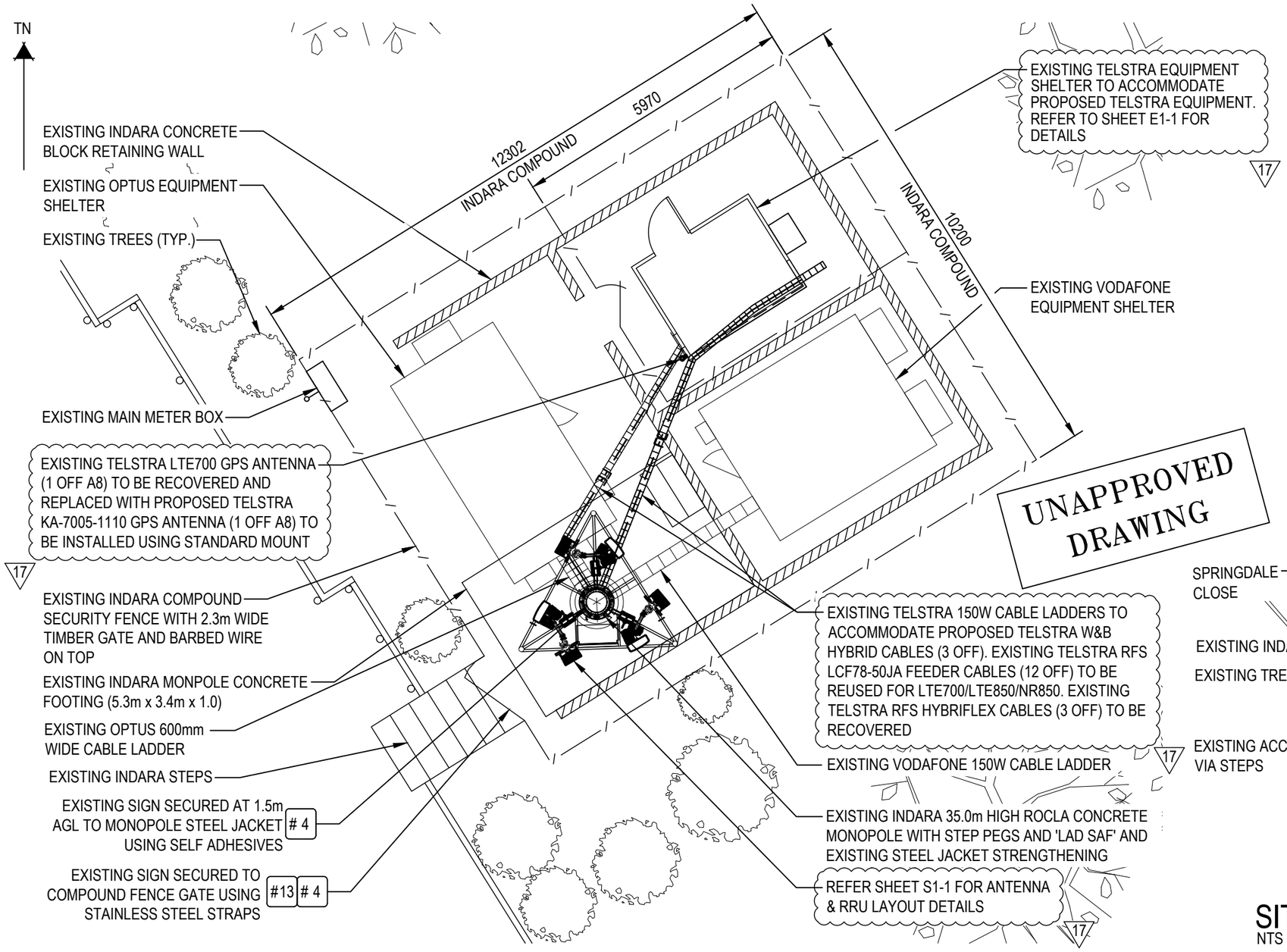


UNAPPROVED DRAWING

## SITE LAYOUT

SCALE 1:100

1m 0 1m 2m 3m 4m 5m

SCALE 1:100

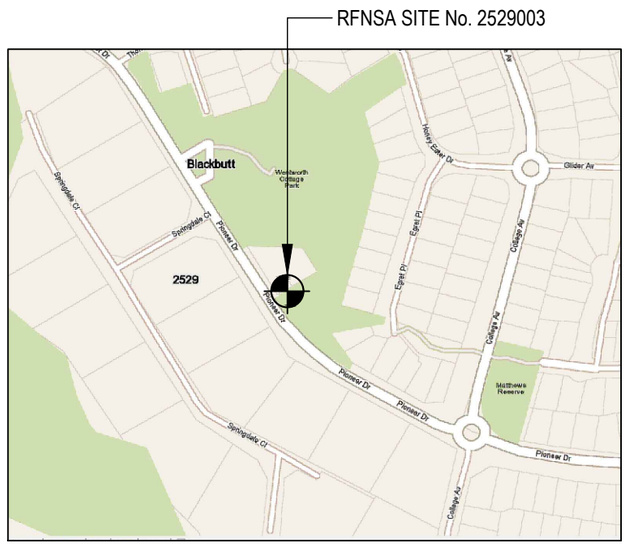


COPYRIGHT © WHEREIS® REGISTERED TRADEMARK OF SENSIS PTY LTD.

## LOCALITY PLAN

NOT TO SCALE

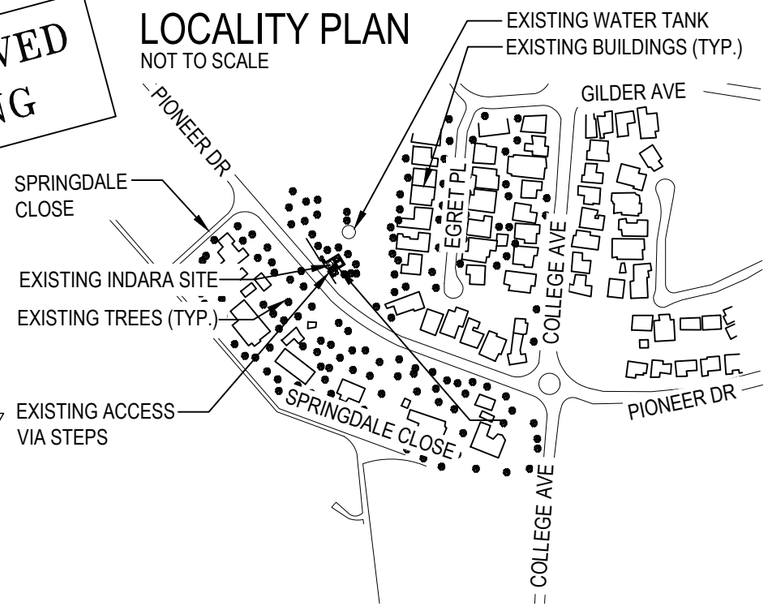


## SITE ACCESS

NTS

NOTE: ANY GANTRY TRAY COVERS SHOWING SIGNS OF SIGNIFICANT WEAR AND TEAR SHALL BE REPLACED WITH NEW COVERS 17

NOTE: THIS DRAWING TO BE READ IN CONJUNCTION WITH SHEET S1-1

## NOTES:

1. ALL FEEDER ACCESS POINTS ON THE STRUCTURE MUST BE BIRD PROOFED AS PER EXTERNAL PLANT POLICY 003615.
2. FOR SITE SPECIFIC NOTES REFER TO SHEETS S0-1, S0-2 & S0-3.
3. FOR EME SIGNS NOTED THUS #X REFER TO 005486 FOR DETAILS.
4. ALL DIMENSIONS ARE IN MILLIMETRES UNLESS OTHERWISE STATED.

## COMPLIANCE BOX

COMPLETED AS PER DESIGN ☐

ALTERATIONS IN RED ☐

NAME (PRINT)

SIGNATURE DATE

17 FOR CONSTRUCTION

DO NOT SCALE

## PROPERTY DESCRIPTION

PART OF LOT 2005 ON DP731181
PARISH OF TERRAGONG
COUNTY OF CAMDEN

| SITE STRUCTURE CO-ORDINATES (GDA94) GPS READING ACCURACY: ± 10m CENTRE OF MONOPOLE | |
|---|---|
| LATITUDE | GDA 94 -34.57356° |
| LONGITUDE | GDA 94 150.83235° |

CYIENT
Level 14, 3 Parramatta Square, 153 Macquarie St, Parramatta, NSW 2150, Australia
T +61 2 8896 6160 | www.cyient.com

| ORDER | DRWN | CHKD | AMENDMENT | EXAM | APPD | DATE | ISS |
|---|---|---|---|---|---|---|---|
| NA19287.01 | AK | LY | AS BUILT - 30053394W0008VPL - LTE700 | AK | MK | 02.12.15 | 12 |
| NA19287.01 | DJ | MS | FOR CONSTRUCTION - 30077714WO061KOR - LTE2100 / LTE2600 | JG | DB | 04.03.19 | 13 |
| NA19287.01 | AB | AD | AS BUILT - 30077714WO092KOR - LTE2100 / LTE2600 | CF | CF | 19.03.19 | 14 |
| NA22652.01 | SP | GM | FOR CONSTRUCTION - 30088461W0125CYI - NR850/NR3600 | MB | MB | 07.01.21 | 15 |
| NA22652.01 | CU | SK | AS BUILT- 30088461W0178CYI - NR850/NR3600 | KSK | DG | 13.08.21 | 16 |
| NA29861.01 | MD | RT | FOR CONSTRUCTION - 80005689WO730CYI - LTE850/NR2600 | MB | MB | 15.06.26 | 17 |

© Telstra Limited ACN 086 174 781 All rights reserved.

Telstra

MOBILE NETWORK SITE 232974
BLACKBUTT RESERVOIR

SITE LAYOUT AND ACCESS
75 PIONEER DR, BLACKBUTT, NSW 2529

DWG NO. N27928 SHT NO. S1

A3

PROPOSED TELSTRA LTE700/LTE850/NR850 TMA'S (3 OFF ABOVE) & LTE700/LTE850/NR850 TMA'S (3 OFF BELOW) TO BE INSTALLED BEHIND PANEL ANTENNAS (A4, A5 & A6) ON EXISTING MOUNTS

TN

HEADFRAME ORIENTATION 58° TN

UNAPPROVED DRAWING

NOTE:
1. IN ALL SECTORS AT 4G ANTENNAS LOCATION RECOVERED QB-CLAMP WITH EXISTING MOUNT AND PROPOSED ANTENNA INSTALLED ON EXISTING MOUNT.
2. IN ALL SECTORS AT AIR ANTENNAS LOCATION RECOVERED QB-CLAMP WITH EXISTING MOUNT AND RE-USED RECOVERED MOUNT ON PROPOSED STANDOFF.

PROPOSED TELSTRA W&B RRU INTERFACE JUNCTION BOXES (3 OFF) TO BE INSTALLED ON EXISTING MOUNTS

EXISTING TELSTRA MERCEDES HEADFRAME

EXISTING INDARA 35.0m HIGH ROCLA CONCRETE MONOPOLE WITH STEP PEGS AND 'LAD SAF' AND EXISTING STEEL JACKET STRENGTHENING

PROPOSED SIGNS UV STABLE STICKERS AND FIXED TO REAR OF ALL TELSTRA PANEL ANTENNAS # 2

EXISTING TELSTRA RRU MOUNTING ARRANGEMENT ALONG WITH MOUNTS TO BE RECOVERED

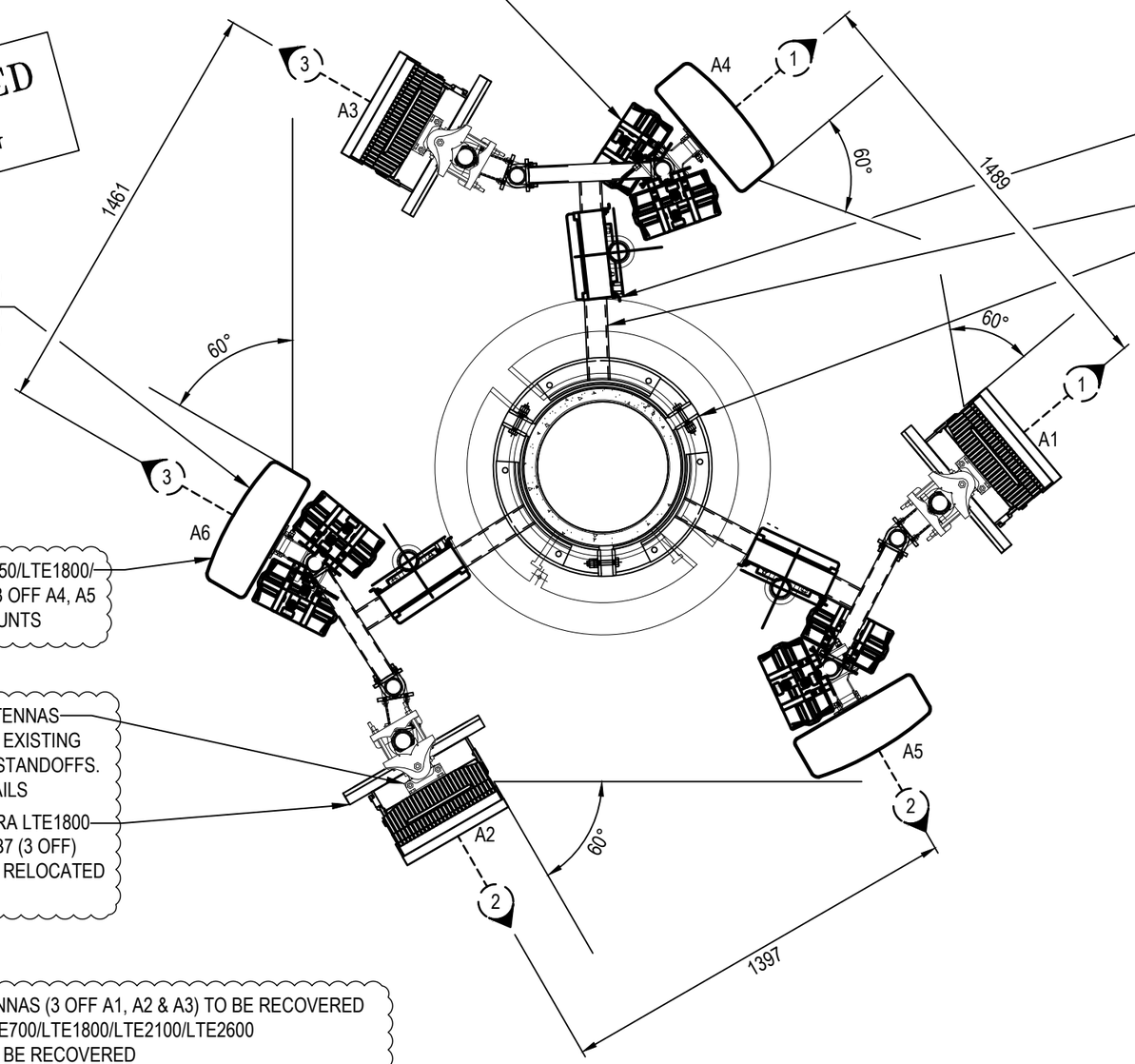


PROPOSED TELSTRA LTE700/LTE850/NR850/LTE1800/LTE2100/NR/LTE2600 PANEL ANTENNAS (3 OFF A4, A5 & A6) TO BE INSTALLED ON EXISTING MOUNTS

PROPOSED TELSTRA NR3600 PANEL ANTENNAS (3 OFF A1, A2 & A3) TO BE INSTALLED ON EXISTING RELOCATED MOUNTS WITH PROPOSED STANDOFFS. REFER TO SHEETS T3-6 & T3-7 FOR DETAILS

PROPOSED TELSTRA PROPOSED TELSTRA LTE1800 /LTE2100/NR/LTE2600 RADIO 4485 B3/B1/B7 (3 OFF) (BELOW) TO BE INSTALLED ON EXISTING RELOCATED MOUNTS WITH PROPOSED STANDOFFS

## RRU LAYOUT AT E.L. 33.70m

SCALE 1:20

EXISTING TELSTRA NR3600 PANEL ANTENNAS (3 OFF A1, A2 & A3) TO BE RECOVERED
EXISTING TELSTRA WCDMA850/NR850/LTE700/LTE1800/LTE2100/LTE2600 PANEL ANTENNAS (3 OFF A4, A5 & A6) TO BE RECOVERED
EXISTING TELSTRA NR850/LTE700 TMA'S (3 OFF) TO BE RECOVERED
EXISTING TELSTRA LTE2600 RADIO 4415 B7 (3 OFF) TO BE RECOVERED
EXISTING TELSTRA LTE1800/LTE2100 RADIO 4480 B1 B3 (3 OFF) TO BE RECOVERED
EXISTING TELSTRA RFS RRU INTERFACE JUNCTION BOXES (3 OFF) TO BE RECOVERED
EXISTING TELSTRA QB CLAMPS (6 OFF) TO BE RECOVERED

## ANTENNA AND RRU LAYOUT AT E.L. 32.05m TO 33.45m

SCALE 1:20

200 0 1000 SCALE 1:20

COMPLIANCE BOX
COMPLETED AS PER DESIGN ☐
ALTERATIONS IN RED ☐
NAME (PRINT)
SIGNATURE DATE

NOTE: THIS DRAWING TO BE READ IN CONJUNCTION WITH SHEET S1

FOR CONSTRUCTION

DO NOT SCALE

NOTES:
1. ALL FEEDER ACCESS POINTS ON THE STRUCTURE MUST BE BIRD PROOFED AS PER EXTERNAL PLANT POLICY 003615.
2. FOR SITE SPECIFIC NOTES REFER TO SHEETS S0-1, S0-2 & S0-3.
3. FOR EME SIGNS NOTED THUS #X REFER TO 005486 FOR DETAILS.
4. ALL DIMENSIONS ARE IN MILLIMETRES UNLESS OTHERWISE STATED.


CYIENT
Level 14, 3 Parramatta Square, 153 Macquarie St, Parramatta, NSW 2150, Australia
T +61 2 8896 6160 | www.cyient.com


| ORDER | DRWN | CHKD | AMENDMENT | EXAM | APPD | DATE | ISS |
|---|---|---|---|---|---|---|---|
| NA15979.01 | AK | LY | AS BUILT - 30053394W0008VPL - LTE700 | AK | MK | 02.12.15 | 14 |
| NA19287.01 | DJ | MS | FOR CONSTRUCTION - 30077714WO061KOR - LTE2100 / LTE2600 | JG | DB | 04.03.19 | 13 |
| NA19287.01 | AB | AD | AS BUILT - 30077714WO092KOR - LTE2100 / LTE2600 | CF | CF | 19.03.19 | 16 |
| NA22652.01 | SP | GM | FOR CONSTRUCTION - 30088461W0125CYI - NR850/NR3600 | MB | MB | 07.01.21 | 17 |
| NA22652.01 | CU | SK | AS BUILT- 30088461W0178CYI - NR850/NR3600 | KSK | DG | 13.08.21 | 18 |
| NA29861.01 | MD | RT | FOR CONSTRUCTION - 80005689WO730CYI - LTE850/NR2600 | MB | MB | 15.06.26 | 19 |

© Telstra Limited ACN 086 174 781 All rights reserved.

Telstra

MOBILE NETWORK SITE 232974
BLACKBUTT RESERVOIR
ANTENNA LAYOUT
75 PIONEER DR, BLACKBUTT, NSW 2529

DWG NO. N27928 SHT NO. S1-1

A3

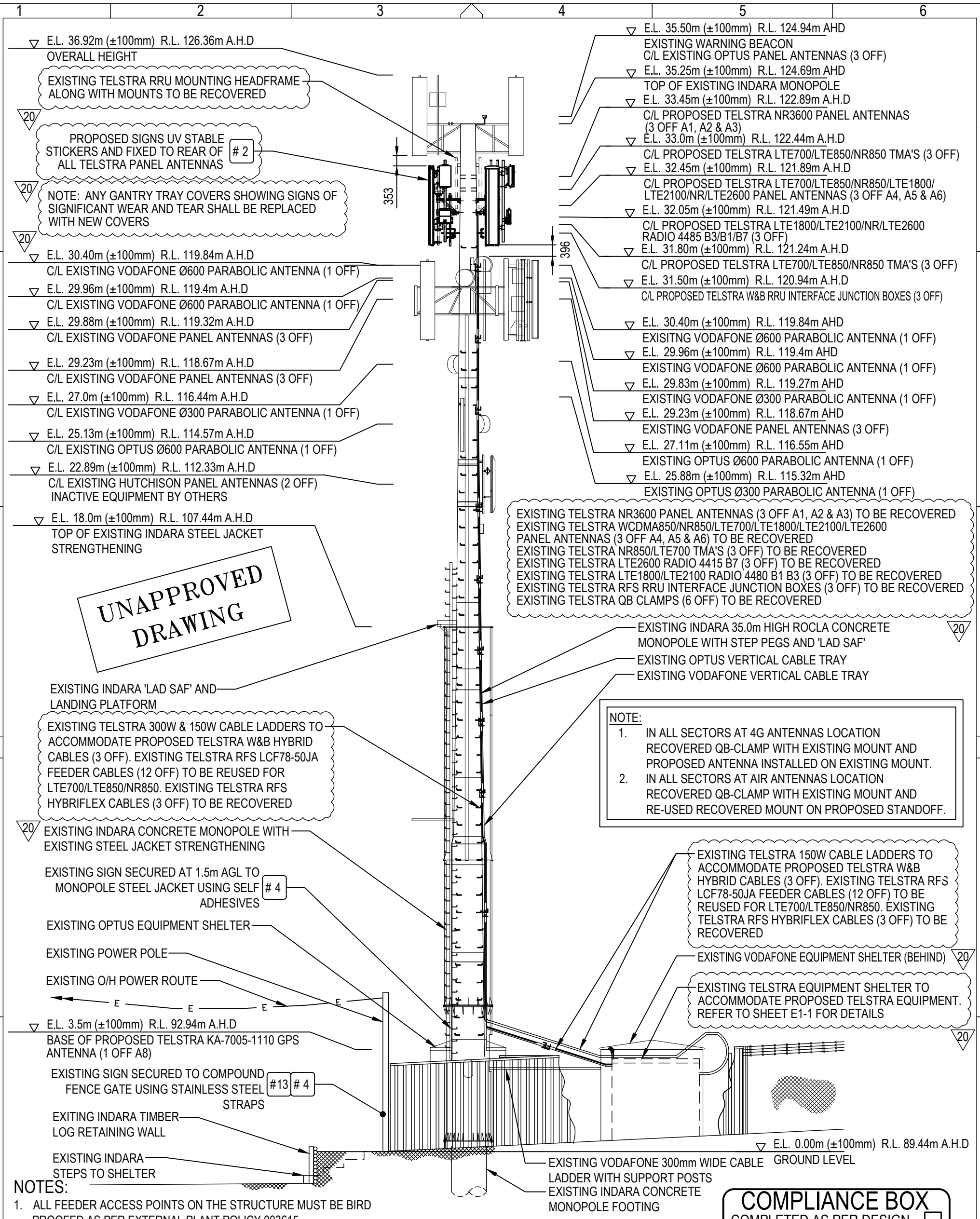


## NOTES:

1. ALL FEEDER ACCESS POINTS ON THE STRUCTURE MUST BE BIRD PROOFED AS PER EXTERNAL PLANT POLICY 003615.
2. FOR SITE SPECIFIC NOTES REFER TO SHEETS S0-1, S0-2 & S0-3.
3. FOR EME SIGNS NOTED THUS #X REFER TO 005486 FOR DETAILS.
4. ALL DIMENSIONS ARE IN MILLIMETRES UNLESS OTHERWISE STATED.

# SOUTH ELEVATION

SCALE 1:125

2m 0 5m SCALE 1:125

NOTE: THIS DRAWING TO BE READ IN CONJUNCTION WITH SHEET S3-2

20

## COMPLIANCE BOX

COMPLETED AS PER DESIGN ☐
ALTERATIONS IN RED ☐
NAME (PRINT)
SIGNATURE DATE

# FOR CONSTRUCTION

DO NOT SCALE

DIMS IN

CYIENT
Level-14, 3 Parramatta Square, 153 Macquarie St, Parramatta, NSW 2150, Australia
T +61 2 8896 6160 | www.cyient.com

| ORDER | DRWN | CHKD | AMENDMENT | EXAM | APPD | DATE | ISS |
|---|---|---|---|---|---|---|---|
| NA15979.01 | AK | LY | AS BUILT - 30053394W0008VPL - LTE700 | AK | MK | 02.12.15 | 15 |
| NA19287.01 | DJ | MS | FOR CONSTRUCTION - 30077714WO061KOR - LTE2100 / LTE2600 | JG | DB | 04.03.19 | 16 |
| NA19287.01 | AB | AD | AS BUILT - 30077714WO092KOR - LTE2100 / LTE2600 | CF | CF | 19.03.19 | 17 |
| NA22652.01 | SP | GM | FOR CONSTRUCTION - 30088461W0125CYI - NR850/NR3600 | MB | MB | 07.01.21 | 18 |
| NA22652.01 | CU | SK | AS BUILT- 30088461W0178CYI - NR850/NR3600 | KSK | DG | 13.08.21 | 19 |
| NA29861.01 | MD | RT | FOR CONSTRUCTION - 80005689WO730CYI - LTE850/NR2600 | MB | MB | 15.06.26 | 20 |

© Telstra Limited ACN 086 174 781 All rights reserved.

Telstra

MOBILE NETWORK SITE 232974
BLACKBUTT RESERVOIR
SOUTH ELEVATION
75 PIONEER DR, BLACKBUTT, NSW 2529

DWG NO. N27928

SHT NO. S3

A3V

# TELSTRA MOBILES ANTENNA CONFIGURATION TABLE

| ANTENNA No | ANTENNA TYPE & SIZE H x W x D (mm) | ANTENNA ACTION REQUIRED | ANTENNA HEIGHT C/L A.G.L. | PHYSICAL ANTENNA BEARING (°T) | SECTOR NO. & TECHNOLOGY |
|---|---|---|---|---|---|
| A1 | ERICSSON AIR3258 PANEL<br>720 x 400 x 200 (mm) | INSTALL | 33.45m | 50° | S1: NR3600<br>S1: NR3600 |
| A2 | ERICSSON AIR3258 PANEL<br>720 x 400 x 200 (mm) | INSTALL | 33.45m | 150° | S2: NR3600<br>S2: NR3600 |
| A3 | ERICSSON AIR3258 PANEL<br>720 x 400 x 200 (mm) | INSTALL | 33.45m | 300° | S3: NR3600<br>S3: NR3600 |
| A4 | KAELUS F6RHEU01 PANEL<br>2705 x 470 x 178 (mm) | INSTALL | 32.45m | 50° | S1: LTE700/LTE850/NR850<br>S1: LTE700/LTE850/NR850 |
| | | | | | S1: LTE700/LTE850/NR850<br>S1: LTE700/LTE850/NR850 |
| | | | | | S1: LTE1800/LTE2100/NR/LTE2600<br>S1: LTE1800/LTE2100/NR/LTE2600 |
| | | | | | S1: LTE1800/LTE2100/NR/LTE2600<br>S1: LTE1800/LTE2100/NR/LTE2600 |
| A5 | KAELUS F6RHEU01 PANEL<br>2705 x 470 x 178 (mm) | INSTALL | 32.45m | 150° | S2: LTE700/LTE850/NR850<br>S2: LTE700/LTE850/NR850 |
| | | | | | S2: LTE700/LTE850/NR850<br>S2: LTE700/LTE850/NR850 |
| | | | | | S2: LTE1800/LTE2100/NR/LTE2600<br>S2: LTE1800/LTE2100/NR/LTE2600 |
| | | | | | S2: LTE1800/LTE2100/NR/LTE2600<br>S2: LTE1800/LTE2100/NR/LTE2600 |
| A6 | KAELUS F6RHEU01 PANEL<br>2705 x 470 x 178 (mm) | INSTALL | 32.45m | 300° | S3: LTE700/LTE850/NR850<br>S3: LTE700/LTE850/NR850 |
| | | | | | S3: LTE700/LTE850/NR850<br>S3: LTE700/LTE850/NR850 |
| | | | | | S3: LTE1800/LTE2100/NR/LTE2600<br>S3: LTE1800/LTE2100/NR/LTE2600 |
| | | | | | S3: LTE1800/LTE2100/NR/LTE2600<br>S3: LTE1800/LTE2100/NR/LTE2600 |

# TELSTRA MOBILES ANTENNA CONFIGURATION TABLE

| ANTENNA No | ANTENNA TYPE & SIZE H x DIA (mm) | ANTENNA ACTION REQUIRED | ANTENNA HEIGHT B/O A.G.L. | PHYSICAL ANTENNA BEARING (°T) | SECTOR NO. & TECHNOLOGY |
|---|---|---|---|---|---|
| A1 (OLD) | ERICSSON AIR6488 PANEL | REMOVE | 32.65m | 50° | - |
| A2 (OLD) | ERICSSON AIR6488 PANEL | REMOVE | 32.65m | 150° | - |
| A3 (OLD) | ERICSSON AIR6488 PANEL | REMOVE | 32.65m | 300° | - |
| A4 (OLD) | TONGYU T2004L6R021 PANEL | REMOVE | 32.65m | 50° | - |
| A5 (OLD) | TONGYU T2004L6R021 PANEL | REMOVE | 32.65m | 150° | - |
| A6 (OLD) | TONGYU T2004L6R021 PANEL | REMOVE | 32.65m | 300° | - |

# TELSTRA MOBILES ANTENNA CONFIGURATION TABLE

| ANTENNA No | ANTENNA TYPE & SIZE H x DIA (mm) | ANTENNA ACTION REQUIRED | ANTENNA HEIGHT B/O A.G.L. | PHYSICAL ANTENNA BEARING (°T) | SECTOR NO. & TECHNOLOGY |
|---|---|---|---|---|---|
| A8 (OLD) | ERICSSON GPS KRE 101 2082 1 OMNI | REMOVE | 3.5m | 0° | - |
| A8 | KAELUS KA-7005-1110 GPS ACTIVE ANTENNA | INSTALL | 3.5m | 0° | - |

UNAPPROVED DRAWING

COMPLIANCE BOX
COMPLETED AS PER DESIGN ☐
ALTERATIONS IN RED ☐
NAME (PRINT)
SIGNATURE DATE

NOTE: THIS DRAWING TO BE READ IN CONJUNCTION WITH SHEET S3

FOR CONSTRUCTION

DO NOT SCALE

CYIENT
Level-14, 3 Parramatta Square, 153 Macquarie St, Parramatta, NSW 2150, Australia
T +61 2 8896 6160 | www.cyient.com

| ORDER | DRWN | CHKD | AMENDMENT | EXAM | APPD | DATE | ISS |
|---|---|---|---|---|---|---|---|
| NA15979.01 | AK | LY | AS BUILT - 30053394W0008VPL - LTE700 | AK | MK | 02.12.15 | 5 |
| NA19287.01 | DJ | MS | FOR CONSTRUCTION - 30077714WO061KOR - LTE2100 / LTE2600 | JG | DB | 04.03.19 | 6 |
| NA19287.01 | AB | AD | AS BUILT - 30077714WO092KOR - LTE2100 / LTE2600 | CF | CF | 19.03.19 | 7 |
| NA22652.01 | SP | GM | FOR CONSTRUCTION - 30088461W0125CYI - NR850/NR3600 | MB | MB | 07.01.21 | 8 |
| NA22652.01 | CU | SK | AS BUILT- 30088461W0178CYI - NR850/NR3600 | KSK | DG | 13.08.21 | 9 |
| NA29861.01 | MD | RT | FOR CONSTRUCTION - 80005689WO730CYI - LTE850/NR2600 | MB | MB | 15.06.26 | 10 |

© Telstra Limited ACN 086 174 781 All rights reserved.

Telstra

MOBILE NETWORK SITE 232974
BLACKBUTT RESERVOIR
ANTENNA CONFIGURATION TABLE - SHEET 1
75 PIONEER DR, BLACKBUTT, NSW 2529

DWG NO. N27928 SHT NO. S3-2

A3

EXISTING TELSTRA 45RU PATHFINDER RACK (1 OFF) TO BE REUSED TO HOST PROPOSED TELSTRA LTE700/LTE850/NR850/LTE1800/LTE2100/NR/LTE2600/NR3600 RP6672 (1 OFF), GRU 05 01 GPS RECEIVER (1 OFF), FIBRE PATCH PANEL (1 OFF), HYBRID CABLE MGMT TRAYS (3 OFF), 10A CB (1 OFF) IN DCDU & SLIDE OUT FIBRE MGMT TRAYS (2 OFF). EXISTING TELSTRA SLIDE OUT FIBRE MGMT TRAY (1 OFF) TO BE REUSED. EXISTING TELSTRA DCDU (1 OFF) TO BE RELOCATED & REUSED FROM GD/103/4/6 TO GD/103/2/35 & R6675 (1 OFF) TO BE RELOCATED & REUSED FROM GD/103/2/5 TO GD/103/2/29. EXISTING TELSTRA RBS6202 (1 OFF) WITH RUS 02 (B28B) (6 OFF), COMBINERS (3 OFF), SIU (1 OFF) & GPS SPLITTER (1 OFF) TO BE DISCONNECTED AND MAKE AS SPARE. EXISTING TELSTRA FIBRE PATCH PANEL (1 OFF), FIBRE MGMT TRAYS (3 OFF), R503 (2 OFF), BB6630 (2 OFF), GPS RECEIVER (1 OFF) & BB5216 (1 OFF) TO BE RECOVERED

14

EXISTING TELSTRA ELTEK SP22-HC PSU (1 OFF) WITH FP2, 1.35kW DC-DC CONVERTERS (8 OFF) & FP2 HE, 2kW RECTIFIERS (9 OFF) TO BE REUSED. EXISTING TELSTRA FXH 190-12S BATTEY STRINGS (3 OFF) TO BE RECOVERED & REPLACED WITH PROPOSED TELSTRA FXH190-12S BATTEY STRINGS (2 OFF)

14

EXISTING FEEDER WINDOW WITH FEB BELOW

EXISTING TELSTRA LENMIC L600P2 AC UNIT (1 OFF) TO BE REUSED. EXISTING TELSTRA AIRWELL AIR CONDITIONER (1 OFF) TO BE DISCONNECTED AND MAKE AS SPARE

EXISTING TELSTRA LENMIC L350A FAN UNIT (1 OFF) TO BE REUSED. EXISTING TELSTRA FAN FILTER (1 OFF) TO BE RECOVERED AND REPLACED WITH PROPOSED TELSTRA VAK0005 FILTER (1 OFF) IN FAN UNIT

14

EXISTING TELASTRA DONOR RACK (1 OFF) TO BE DISCONNECTED AND MAKE AS SPARE

EXISTING TELSTRA EATON INTERNAL 12.3WAY SPD (1 OFF) WITH 5G AUGMENTATION BOX (1 OFF) TO BE RECOVERED

14

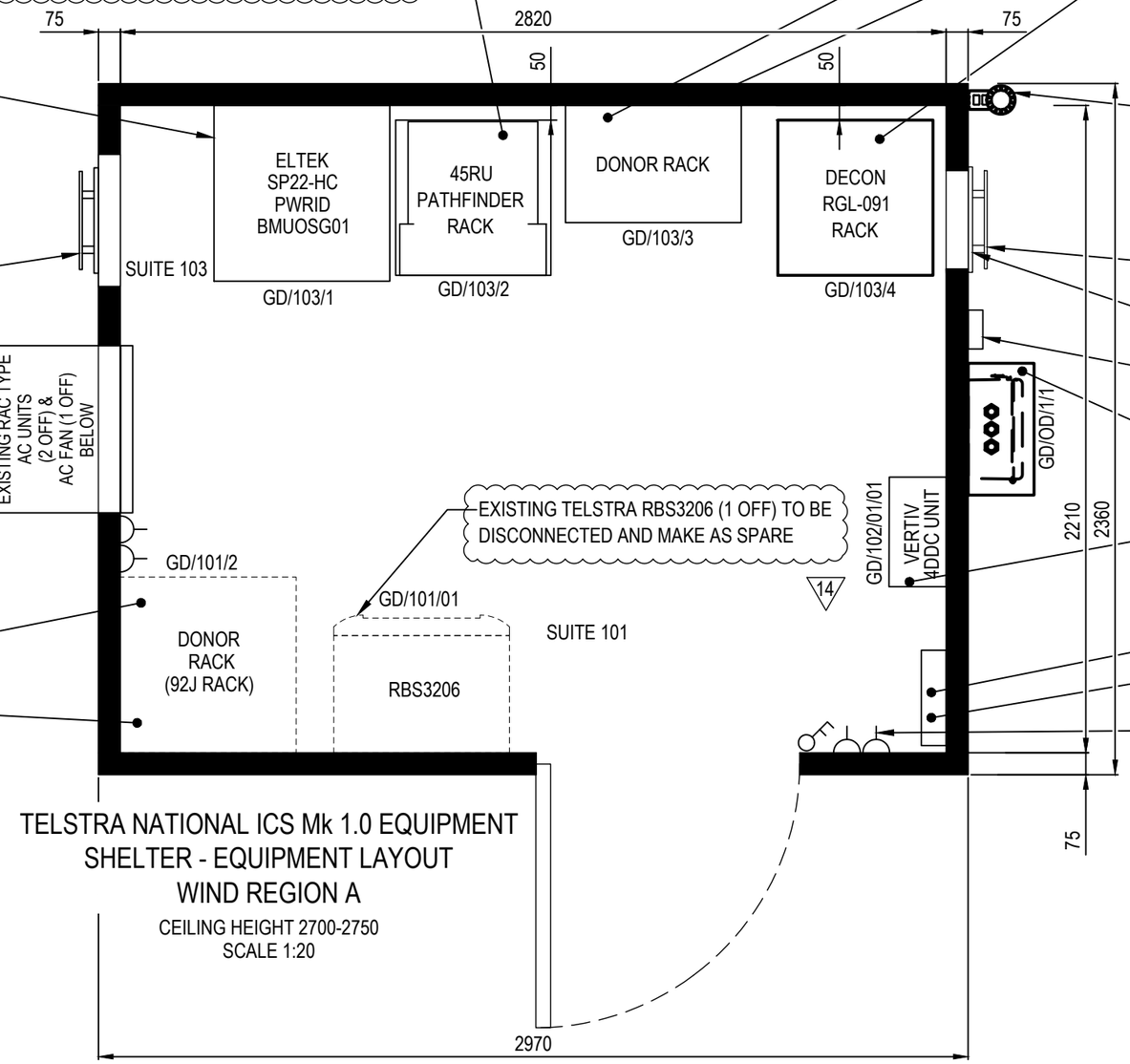


EXISTING TELSTRA RBS3206 (1 OFF) TO BE DISCONNECTED AND MAKE AS SPARE

14

EXISTING TESLTRA FILTERS (6 OFF) TO BE DISCONNECTED AND MAKE AS SPARE

14

EXISTING TELSTRA ESC (1 OFF)

EXISITNG TELSTRA 45RU PATHFINDER RACK (1 OFF) WITH FILTERS (3 OFF), RADIO 2212 B5 (3 OFF) & FIBRE MGMT TRAY (1 OFF) TO BE RECOVERED & REPLACED WITH PROPOSED TELSTRA DECON RGL-091 RACK (1 OFF) TO HOST PROPOSED TELSTRA KA-6035 QUAD FILTERS (3 OFF), LTE700/LTE850/NR850 RADIO 4490HP B28/B26 (3 OFF), 4490 ADAPTOR SHELFS (3 OFF) & KEREM A100 PDP (1 OFF). EXISITNG TELSTRA DCDU (1 OFF) TO BE RELOCATED TO GD/103/2

EXISTING TELSTRA LTE700 GPS ANTENNA (1 OFF A8) TO BE RECOVERED AND REPLACED WITH PROPOSED TELSTRA KA-7005-1110 GPS ANTENNA (1 OFF A8) TO BE INSTALLED ON SHELTER ROOF USING STANDARD MOUNT

14

EXISTING TELSTRA GLAND PLATE & FEEDER WINDOW WITH ALUMINIUM GLAND PLATE

EXISTING TELSTRA FEB EXTENSION BAR BELOW THE EXISTING FEB

EXISTING TELSTRA GPS SURGE ARRESTER DEVICE IS INSTALLED WITHIN 1m OF FEEDER EARTH CABLE

PROPOSED TELSTRA VERTIV 12.3 WAY SPD BOX (1 OFF) TO BE INSTALL ON EXTERNAL WALL IN WEATHERPROOF ENCLOSURE

EXISTING TELSTRA VERTIV DC-DC CONVERTER SUBRACK (1 OFF) WITH DC-DC CONVERTERS (4 OFF) INSTALLED ON INTERNAL WALL TO BE REUSED FOR VERTIV SPD FEED 3

14

EXISTING DISTRIBUTION BOARD (1 OFF)

EXISTING TELSTRA PLC (1 OFF)

EXISTING GPO's (2 OFF) TYP

UNAPPROVED DRAWING

# TELSTRA NATIONAL ICS Mk 1.0 EQUIPMENT SHELTER - EQUIPMENT LAYOUT WIND REGION A

CEILING HEIGHT 2700-2750
SCALE 1:20

## COMPLIANCE BOX

COMPLETED AS PER DESIGN ☐
ALTERATIONS IN RED ☐
NAME (PRINT)
SIGNATURE DATE

14 FOR CONSTRUCTION

## LEGEND

EXISTING EQUIPMENT
RESERVED EQUIPMENT
PROPOSED EQUIPMENT
LIGHT SWITCH

## NOTES :

1. FOR SITE SPECIFIC NOTES REFER TO SHEETS S0-1, S0-2 & S0-3.
2. REFER TO ICS DRAWINGS IN CADLINK NATIONAL DATABASE.
3. MITS POSITIONS IN FORMAT XX/X/XX WHERE SHELTER ON GROUND PREFIX GD/1/01 AND SHELTER ON ROOFTOP PREFIX RT/1/01. REFERENCE SP000511 NUMBERING, LABELLING AND DATA ENTRY REQUIREMENTS OF NETWORK INVENTORY.

DO NOT SCALE


CYIENT
Level-14, 3 Parramatta Square, 153 Macquarie St, Parramatta, NSW 2150, Australia
T +61 2 8896 6160 | www.cyient.com


| ORDER | DRWN | CHKD | AMENDMENT | EXAM | APPD | DATE | ISS |
|---|---|---|---|---|---|---|---|
| NA15979.01 | AK | LY | AS BUILT - 30053394W0008VPL - LTE700 | AK | MK | 02.12.15 | 9 |
| NA19287.01 | DJ | MS | FOR CONSTRUCTION - 30077714WO061KOR - LTE2100 / LTE2600 | JG | DB | 04.03.19 | 10 |
| NA19287.01 | AB | AD | AS BUILT - 30077714WO092KOR - LTE2100 / LTE2600 | CF | CF | 19.03.19 | 11 |
| NA22652.01 | SP | GM | FOR CONSTRUCTION - 30088461W0125CYI - NR850/NR3600 | MB | MB | 07.01.21 | 12 |
| NA22652.01 | CU | SK | AS BUILT- 30088461W0178CYI - NR850/NR3600 | KSK | DG | 13.08.21 | 13 |
| NA29861.01 | MD | RT | FOR CONSTRUCTION - 80005689WO730CYI - LTE850/NR2600 | MB | MB | 15.06.26 | 14 |

© Telstra Limited ACN 086 174 781 All rights reserved.

Telstra

MOBILE NETWORK SITE 232974
BLACKBUTT RESERVOIR
EQUIPMENT LAYOUT
75 PIONEER DR, BLACKBUTT, NSW 2529

DWG NO. N27928
SHT NO. E1-1

A3

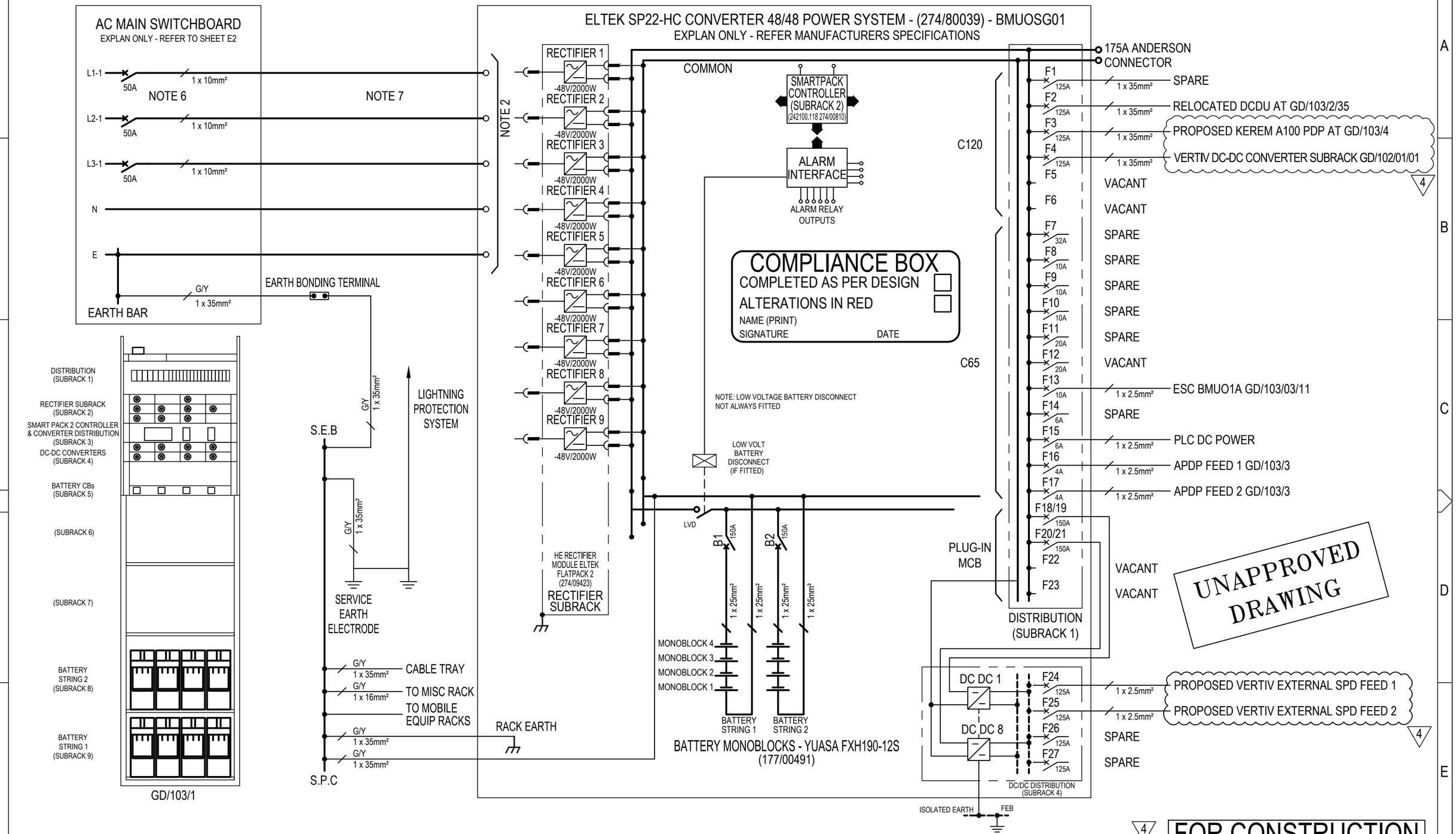


1. EARTHING AND A.C. WIRING IAW AS3000, AS3015, & OTHER RELEVANT DOCUMENTATION.
2. REFER TO MANUFACTURERS HAND BOOK FOR AC CONNECTIONS.
3. PANEL NUMBERING IN THE SUBRACK NUMBERED AS ENTERED IN STRUCTURE BUILDER/MITS.
4. CELLS TO BE NUMBERED FROM 1 AT THE POSITIVE END OF STRING.
5. BATTERY STRINGS TO BE NUMBERED AS SHOWN ABOVE.
6. BATTERY EXTENSION RACK (27480042) TO BE INSTALLED AS REQUIRED.
7. REFER MANUFACTURER'S HANDBOOK FOR INPUT BREAKER SIZE. MINIMUM 32 A, RECOMMENDED 50 A Th/Mag e.g. MGC60H OR Hy/Mag C2 e.g.. CBI QF OR QY.
8. REFER MANUFACTURER'S HANDBOOK FOR CABLE SIZE. MINIMUM 6mm², RECOMMENDED 10mm². WHEN 50A CIRCUIT. BREAKERS ARE USED, CABLE TO BE 10mm² OR GREATER.
9. DC-DC CONVERTER MODULES TO BE ORDERED AS REQUIRED.

DO NOT SCALE

CYIENT
Level-14, 3 Parramatta Square, 153 Macquarie St, Parramatta, NSW 2150, Australia
T +61 2 8896 6160 | www.cyient.com

| ORDER | DRWN | CHKD | AMENDMENT | EXAM | APPD | DATE | ISS |
|---|---|---|---|---|---|---|---|
| NA19287.01 | DB | AD | AS BUILT - 30077714WO092KOR - LTE2100 / LTE2600 | CF | CF | 19.03.19 | 1 |
| NA22652.01 | SP | GM | FOR CONSTRUCTION - 30088461W0125CYI - NR850/NR3600 | MB | MB | 07.01.21 | 2 |
| NA22652.01 | CU | SK | AS BUILT- 30088461W0178CYI - NR850/NR3600 | KSK | DG | 13.08.21 | 3 |
| NA29861.01 | JH | RT | FOR CONSTRUCTION - 80005689WO730CYI - LTE850/NR2600 | MB | MB | 15.06.26 | 4 |

© Telstra Limited ACN 086 174 781 All rights reserved.

Telstra

MOBILE NETWORK SITE 232974
BLACKBUTT RESERVOIR
DC POWER LINE DIAGRAM
75 PIONEER DR, BLACKBUTT, NSW 2529

DWG NO. N27928 SHT NO. E4

A3

EXISTING TELSTRA COMBINERS (3 OFF) & GPS SPLITTER (1 OFF) TO BE DISCONNECTED AND MAKE AS SPARE

PROPOSED TELSTRA 10A CB (1 OFF) IN DCDU. EXISTING TELSTRA DCDU (1 OFF) TO BE RELOCATED & REUSED FROM GD/103/4/6 TO GD/103/2/35

PROPOSED TELSTRA LTE700/LTE850/NR850/LTE1800/LTE2100/NR/LTE2600/NR3600 RP6672 (1 OFF)

EXISTING TELSTRA GPS RECEIVER (1 OFF) TO BE RECOVERED AND REPLACED WITH PROPOSED GRU 05 01 GPS RECEIVER (1 OFF)

EXISTING TELSTRA RBS6202 (1 OFF) WITH EXISTING RUS02 B28 (6 OFF) TO BE DISCONNECTED TO MAKE AS SPARE. EXISTING TELSTRA R503 (2 OFF) & BB5216 (1 OFF) TO BE RECOVERED

EXISTING TELSTRA BB6630 (2 OFF) TO BE RECOVERED

EXISTING TELSTRA FIBRE PATCH PANEL (1 OFF) TO BE RECOVERED & REPLACED WITH PROPOSED TELSTRA FIBRE PATCH PANEL (1 OFF). EXISTING TELSTRA SLIDE OUT FIBRE MGMT TRAY (1 OFF) TO BE REUSED

EXISTING TELSTRA SIU (1 OFF) TO DISCONNECTED AND MAKE AS SPARE

EXISTING TELSTRA ROUTER R6675 (1 OFF) TO BE RELOCATED TO GD/103/2/29

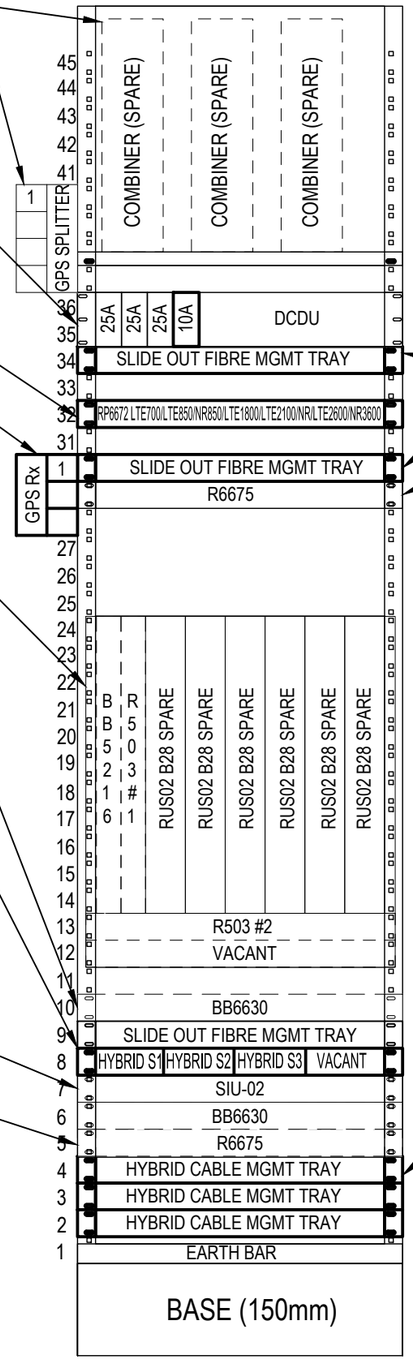


45RU PATHFINDER RACK IN GD/103/2
SCALE 1:10

PROPOSED TELSTRA KA-6035 QUAD FILTERS (3 OFF)

PROPOSED TELSTRA SLIDE OUT FIBRE MGMT TRAYS (2 OFF)

EXISTING TELSTRA R6675 (1 OFF) TO BE RELOCATED & REUSED FROM GD/103/2/5 TO GD/103/2/29

PROPOSED TELSTRA LTE700/LTE850/NR850 RADIO 4490HP (B28/B26) (3 OFF) & 4490 ADAPTOR SHELFS (3 OFF)

UNAPPROVED DRAWING

EXISTING TELSTRA FIBRE MGMT TRAYS (3 OFF) TO BE RECOVERED AND REPLACED WITH PROPOSED TELSTRA HYBRID CABLE MGMT TRAYS (3 OFF)

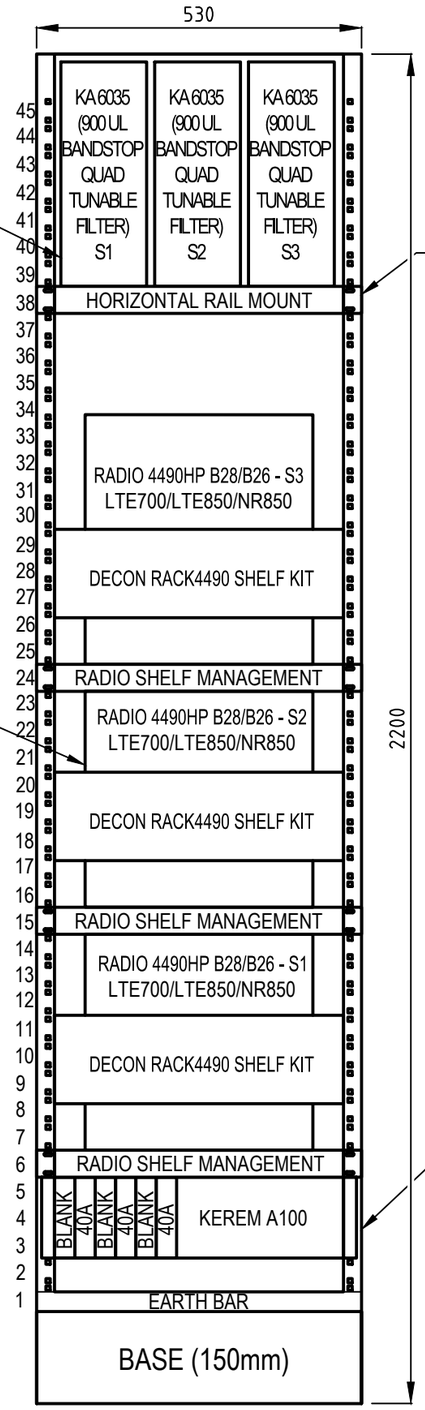


DECON RGL-091 RACK IN GD/103/4
SCALE 1:10

EXISITNG TELSTRA 45RU PATHFINDER RACK (1 OFF) WITH FILTERS (3 OFF), RADIO 2212 B5 (3 OFF) & FIBRE MGMT TRAY (1 OFF) TO BE RECOVERED AND REPLACED WITH PROPOSED TELSTRA DECON RGL-091 RACK (1 OFF). EXISITNG TELSTRA DCDU (1 OFF) TO BE RELOCATED TO GD/103/2

PROPOSED TELSTRA KEREM A100 PDP (1 OFF)

COMPLIANCE BOX
COMPLETED AS PER DESIGN ☐
ALTERATIONS IN RED ☐
NAME (PRINT)
SIGNATURE DATE

FOR CONSTRUCTION

DO NOT SCALE

NOTES:
1. FOR SITE SPECIFIC NOTES REFER TO SHEETS S0-1, S0-2 & S0-3.
2. INDICATIVE 45RU PATHFINDER RACK SHOWN FOR LAYOUT PURPOSES ONLY.
3. REFER TO SHEET E1-1 FOR EQUIPMENT LAYOUT DETAILS.
4. ALL DIMENSIONS ARE IN MILLIMETRES UNLESS SPECIFIED OTHERWISE.


CYIENT
Level 14, 3 Parramatta Square, 153 Macquarie St, Parramatta, NSW 2150, Australia
T +61 2 8896 6160 | www.cyient.com


| ORDER | DRWN | CHKD | AMENDMENT | EXAM | APPD | DATE | ISS |
|---|---|---|---|---|---|---|---|
| NA15979.01 | AK | LY | AS BUILT - 30053394W0008VPL - LTE700 | AK | MK | 02.12.15 | 2 |
| NA19287.01 | DJ | MS | FOR CONSTRUCTION - 30077714WO061KOR - LTE2100 / LTE2600 | JG | DB | 04.03.19 | 3 |
| NA19287.01 | VK | AD | AS BUILT - 30077714WO092KOR - LTE2100 / LTE2600 | CF | CF | 19.03.19 | 4 |
| NA22652.01 | SP | GM | FOR CONSTRUCTION - 30088461W0125CYI - NR850/NR3600 | MB | MB | 07.01.21 | 5 |
| NA22652.01 | CU | SK | AS BUILT- 30088461W0178CYI - NR850/NR3600 | KSK | DG | 13.08.21 | 6 |
| NA29861.01 | JH | RT | FOR CONSTRUCTION - 80005689WO730CYI - LTE850/NR2600 | MB | MB | 15.06.26 | 7 |

© Telstra Limited ACN 086 174 781 All rights reserved.

Telstra

MOBILE NETWORK SITE 232974
BLACKBUTT RESERVOIR
45RU PATHFINDER RACK LAYOUT
75 PIONEER DR, BLACKBUTT, NSW 2529

DWG NO. N27928
SHT NO. E5

A3

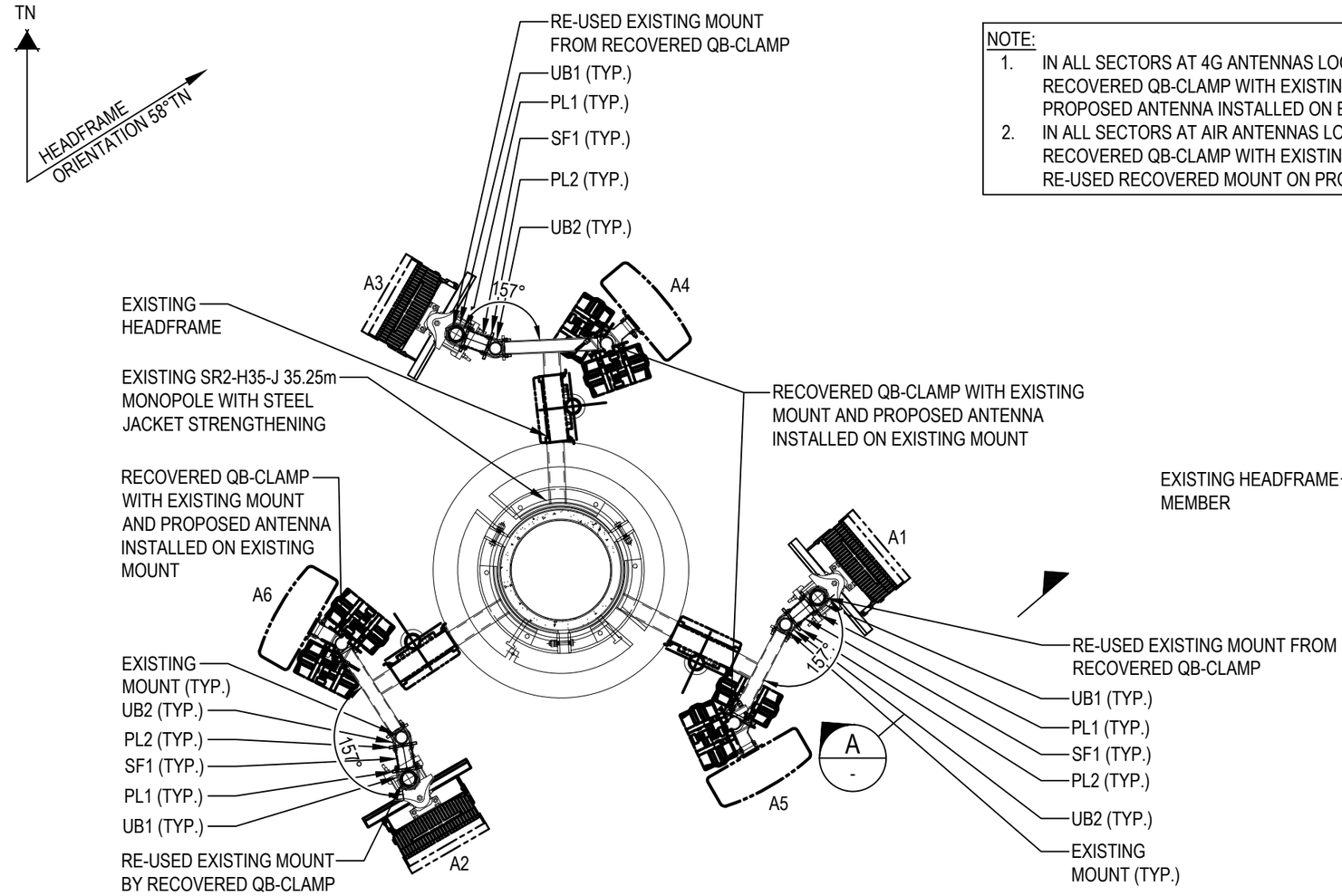


## ANTENNA LAYOUT AT E.L. 32.45m & 33.45m

SCALE 1:25

NOTE:
1. IN ALL SECTORS AT 4G ANTENNAS LOCATION RECOVERED QB-CLAMP WITH EXISTING MOUNT AND PROPOSED ANTENNA INSTALLED ON EXISTING MOUNT.
2. IN ALL SECTORS AT AIR ANTENNAS LOCATION RECOVERED QB-CLAMP WITH EXISTING MOUNT AND RE-USED RECOVERED MOUNT ON PROPOSED STANDOFF.

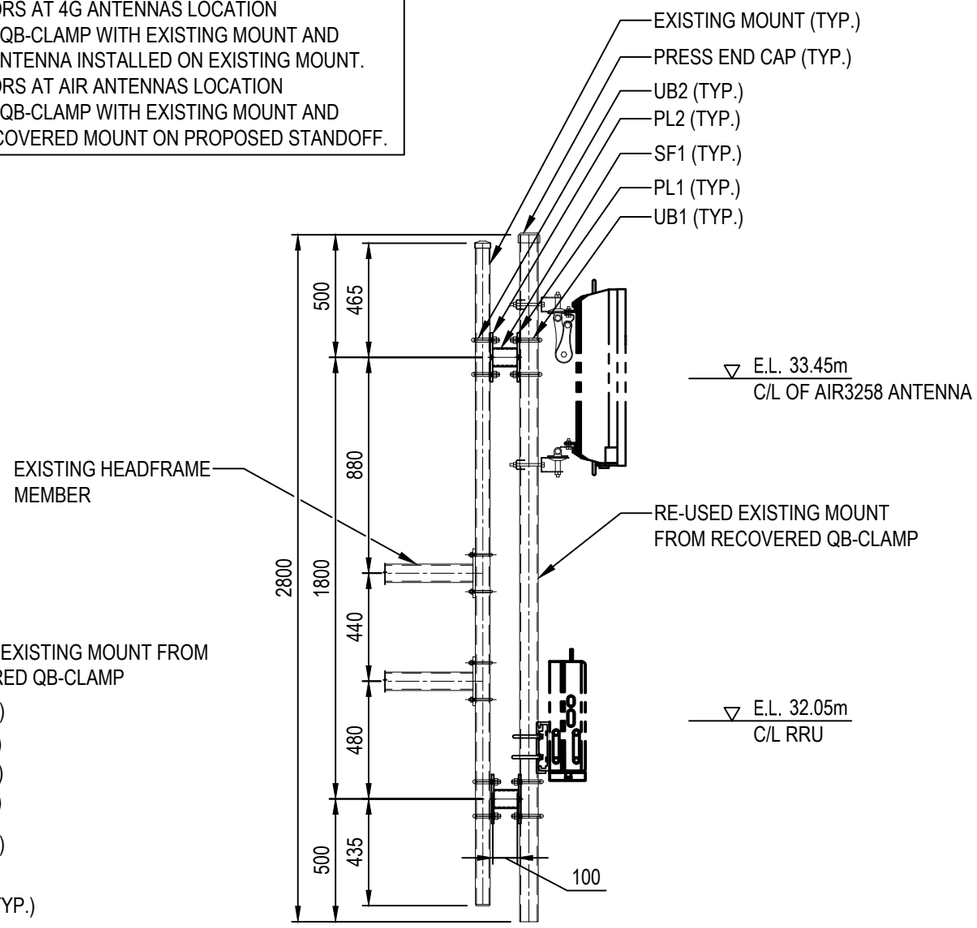


## SECTION A -

SCALE 1:25

UNAPPROVED DRAWING

## GENERAL NOTES:

1. FOR STANDARD CONSTRUCTION NOTES REFER TO TELSTRA STANDARD DRAWING 017866P05.
2. ALL DIMENSIONS ARE IN MILLIMETERS UNLESS SPECIFIED OTHERWISE.
3. HIGH STRENGTH BOLTS AND ALL SPRING WASHERS TO AS 1252.1 (2016) GRADE /S U.N.O.
4. ALL BOLTS INCLUDING U-BOLTS TO BE SUPPLIED WITH CORRESPONDING NUTS, SPRING WASHERS AND LOCKNUTS. REFER STANDARD DRAWING 017866P70 SHEET 4 ISSUE 4 FOR DETAILS.
5. ALL HOLLOW SECTIONS TO AS 1163 (2016) GRADE C250LO U.N.O. ALL HOT ROLLED STEEL TO AS 3678 (2016) & AS 3679 (2016) GRADE 300 U.N.O.
6. ALL STEELWORK TO BE IN ACCORDANCE WITH AS 4100 & AS 1163.
7. ALL WELDING TO BE CATEGORY SP TO AS 1554 (2014) ALL WELDS TO BE 6mm CONTINUOUS FILLET WELDS U.N.O.
8. ALL STEELWORK TO BE HOT DIP GALVANIZED TO AS 4680, AS 1559 & AS 1214.
9. APPLY 2 COATS OF ZINC RICH PAINT TO ALL FRESHLY CUT, WELDED OR DRILLED STEEL ON SITE, REMOVE ALL SWARF, BURRS & SHARP EDGES.

NOTE FOR MANUFACTURER & INSTALLER:
TRIAL ASSEMBLE PRIOR TO GALVANISING AND DELIVERY TO SITE TO ENSURE CORRECT FIT AND NUMBER OF PARTS

COMPLIANCE BOX
COMPLETED AS PER DESIGN ☐
ALTERATIONS IN RED ☐
NAME (PRINT)
SIGNATURE DATE

FOR CONSTRUCTION

DO NOT SCALE

CYIENT
Level 14, 3 Parramatta Square, 153 Macquarie St, Parramatta, NSW 2150, Australia
T +61 2 8896 6160 | www.cyient.com

| ORDER | DRWN | CHKD | AMENDMENT | EXAM | APPD | DATE | ISS |
|---|---|---|---|---|---|---|---|
| NA29861.01 | RR | GNK | FOR CONSTRUCTION - 80005689WO730CYI - LTE850/NR2600 | MB | MB | 15.06.26 | 1 |

© Telstra Limited ACN 086 174 781 All rights reserved.

Telstra

MOBILE NETWORK SITE 232974
BLACKBUTT RESERVOIR
ANTENNA MOUNTING DETAILS - SHEET 1 OF 2
75 PIONEER DR, BLACKBUTT, NSW 2529

DWG NO. N27928 SHT NO. T3-6

A3

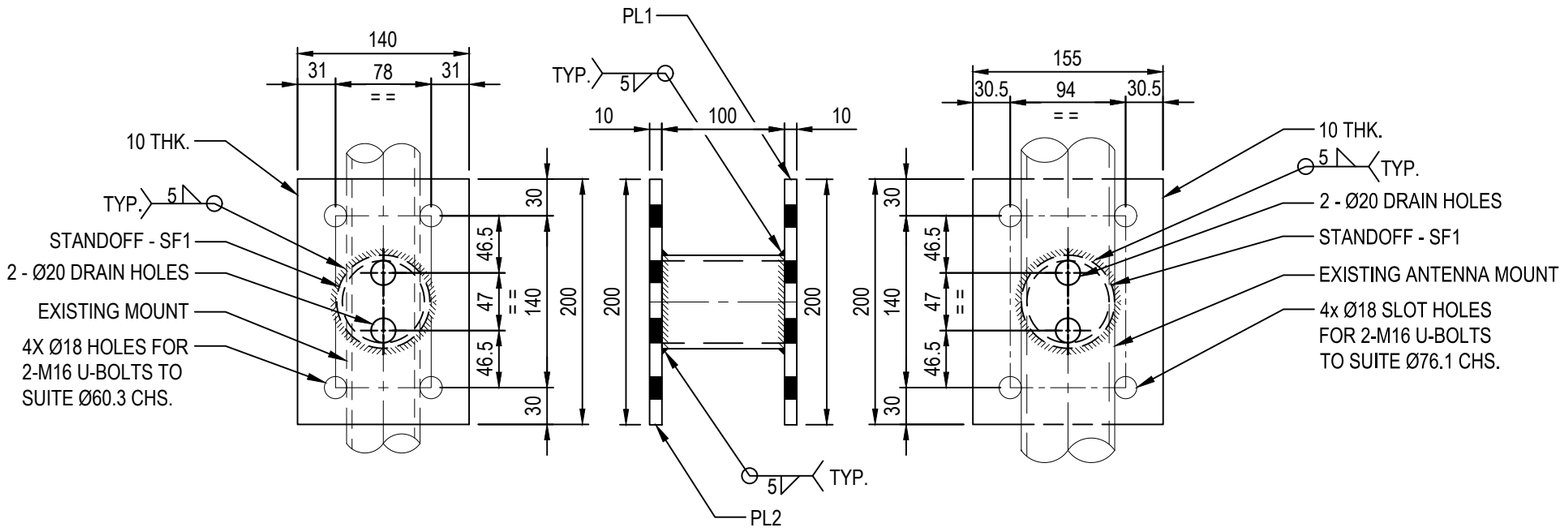


PLATE - PL2
SCALE 1:5

STANDOFF - SF1
SCALE 1:5

PLATE - PL1
SCALE 1:5

## MEMBER SCHEDULE

| No. | ITEM DESCRIPTION | Qty. |
|---|---|---|
| SF1 | PROPOSED STANDOFF Ø76.1x4.5 Thk. CHS - 100mm LONG | 6 |
| PL1 | 155x200x10Thk | 6 |
| PL2 | 140x200x10Thk | 6 |
| UB1 | PROPOSED M16 U-BOLTS TO SUIT Ø76.1 CHS TO FIX EXISTING MOUNT TO PL1 (# REFER NOTE 4) | 12 |
| UB2 | PROPOSED M16 U-BOLTS TO SUIT Ø60.3 CHS TO FIX EXISTING MOUNT TO PL2 (# REFER NOTE 4) | 12 |

UNAPPROVED DRAWING

COMPLIANCE BOX
COMPLETED AS PER DESIGN ☐
ALTERATIONS IN RED ☐
NAME (PRINT)
SIGNATURE DATE

FOR CONSTRUCTION

DO NOT SCALE

NOTE FOR MANUFACTURER & INSTALLER:
TRIAL ASSEMBLE PRIOR TO GALVANISING AND DELIVERY TO SITE TO ENSURE CORRECT FIT AND NUMBER OF PARTS

CYIENT
Level-14, 3 Parramatta Square, 153 Macquarie St, Parramatta, NSW 2150, Australia
T +61 2 8896 6160 | www.cyient.com

| ORDER | DRWN | CHKD | AMENDMENT | EXAM | APPD | DATE | ISS |
|---|---|---|---|---|---|---|---|
| NA29861.01 | RR | GNK | FOR CONSTRUCTION - 80005689WO730CYI - LTE850/NR2600 | MB | MB | 15.06.26 | 1 |

© Telstra Limited ACN 086 174 781 All rights reserved.

Telstra

MOBILE NETWORK SITE 232974
BLACKBUTT RESERVOIR
ANTENNA MOUNTING DETAILS - SHEET 2 OF 2
75 PIONEER DR, BLACKBUTT, NSW 2529

DWG NO. N27928
SHT NO. T3-7

A3